SENTINEL HOLDING
INSTITUT

SHI-PRODUKTPASS

Produkte finden - Gebäude zertifizieren

SHI-Produktpass-Nr.:

2462-10-1001

SPAX
Kohlenstoffstahlschraube

Warengruppe: Schrauben - Befestigungstechnik - Zubehör & Werkzeuge

SPAX International GmbH & Co. KG
Kölner Straße 71 - 77
58256 Ennepetal

Produktqualitäten:

- SHI-Produkt bewertung 2024 ✓
- QNG Qualitätssiegel Nachhaltiges Gebäude ✓
- DGNB NEUBAU 2023.2 ✓
- DGNB NEUBAU 2023 ✓
- DGNB NEUBAU 2018 ✓
- BNB-BN NEUBAU V2015 ✓
- EU-TAXONOMIE ✓
- BREEAM DE NEUBAU 2018 ✓
- LEED v4.1 (outside US) ✓

GEPRÜFT NACHHALTIGES PRODUKT
SHI PRODUKT PASS
SENTINEL HOLDING INSTITUT
www.sentinel-holding.eu/pruefkriterien

Köttner

Helmut Köttner
Wissenschaftlicher Leiter
Freiburg, den 18.08.2026

Produkt:
SPAX Kohlenstoffstahlschraube

SHI Produktpass-Nr.:
2462-10-1001

Inhalt

SHI-Produktbewertung 2024	1
QNG - Qualitätssiegel Nachhaltiges Gebäude	2
DGNB Neubau 2023.2	3
DGNB Neubau 2023	4
DGNB Neubau 2018	5
BNB-BN Neubau V2015	6
EU-Taxonomie	7
BREEAM DE Neubau 2018	8
LEED v4.1	9
Produktsiegel	10
Rechtliche Hinweise	11
Technisches Datenblatt/Anhänge	12

Wir sind stolz darauf, dass die SHI-Datenbank, die erste und einzige Datenbank für Bauprodukte ist, die ihre umfassenden Prozesse sowie die Aktualität regelmäßig von dem unabhängigen Prüfunternehmen SGS-TÜV Saar überprüfen lässt.

SENTINEL HOLDING
INSTITUT

Produkt:
SPAX Kohlenstoffstahlschraube

SHI Produktpass-Nr.:
2462-10-1001

SPAX®

SHI-Produktbewertung 2024

Seit 2008 etabliert die Sentinel Holding Institut GmbH (SHI) einen einzigartigen Standard für schadstoffgeprüfte Produkte. Experten führen unabhängige Produktprüfungen nach klaren und transparenten Kriterien durch. Zusätzlich überprüft das unabhängige Prüfunternehmen SGS-TÜV Saar regelmäßig die Prozesse und Aktualität.

Kriterium	Produktkategorie	Schadstoffgrenzwert	Bewertung
SHI-Produktbewertung	sonstige Produkte	TVOC ≤ 300 µg/m^3 Formaldehyd ≤ 24 µg/m^3	Emissionsneutral

SENTINEL HOLDING
INSTITUT

Produkt:
SPAX Kohlenstoffstahlschraube

SHI Produktpass-Nr.:
2462-10-1001

SPAX®

QNG - Qualitätssiegel Nachhaltiges Gebäude

Das Qualitätssiegel Nachhaltiges Gebäude, entwickelt durch das Bundesministerium für Wohnen, Stadtentwicklung und Bauwesen (BMWSB), legt Anforderungen an die ökologische, soziokulturelle und ökonomische Qualität von Gebäuden fest. Das Sentinel Holding Institut prüft Bauprodukte gemäß den QNG-Anforderungen für eine Zertifizierung und vergibt das QNG-ready Siegel. Das Einhalten des QNG-Standards ist Voraussetzung für den KfW-Förderkredit. Für bestimmte Produktgruppen hat das QNG derzeit keine spezifischen Anforderungen definiert. Diese Produkte sind als nicht bewertungsrelevant eingestuft, können jedoch in QNG-Projekten genutzt werden.

Kriterium	Pos. / Bauproduktgruppe	Betrachtete Stoffe	QNG Freigabe
3.1.3 Schadstoffvermeidung in Baumaterialien			QNG-ready nicht bewertungsrelevant

Produkt:
SPAX Kohlenstoffstahlschraube

SHI Produktpass-Nr.:
2462-10-1001

DGNB Neubau 2023.2

Kriterium	Pos. / Relevante Bauteile / Bau-Materialien / Flächen	Betrachtete Stoffe / Aspekte	Qualitätsstufe
ENV 1.2 Risiken für die lokale Umwelt			nicht bewertungsrelevant

SENTINEL HOLDING
INSTITUT

Produkt:
SPAX Kohlenstoffstahlschraube

SHI Produktpass-Nr.:
2462-10-1001

DGNB Neubau 2023

Das DGNB-System (Deutsche Gesellschaft für Nachhaltiges Bauen) bewertet die Nachhaltigkeit von Gebäuden verschiedener Art. Das System ist sowohl anwendbar für private und gewerbliche Großprojekte als auch für kleinere Wohngebäude. Die Version 2023 setzt hohe Standards für ökologische, ökonomische, soziokulturelle und funktionale Aspekte während des gesamten Lebenszyklus eines Gebäudes.

Kriterium	Bewertung
ENV 1.1 Klimaschutz und Energie (*)	Kann Gesamtbewertung positiv beeinflussen
Nachweis: EPD vorhanden, EPD-Nr.: EPD-IES-0025601:001	

Kriterium	Pos. / Relevante Bauteile / Bau-Materialien / Flächen	Betrachtete Stoffe / Aspekte	Qualitätsstufe
ENV 1.2 Risiken für die lokale Umwelt, 03.05.2024 (3. Auflage)	nicht zutreffend		nicht bewertungsrelevant

Kriterium	Pos. / Relevante Bauteile / Bau-Materialien / Flächen	Betrachtete Stoffe / Aspekte	Qualitätsstufe
ENV 1.2 Risiken für die lokale Umwelt, 29.05.2025 (4. Auflage)	nicht zutreffend		nicht bewertungsrelevant

SENTINEL HOLDING
INSTITUT

Produkt:
SPAX Kohlenstoffstahlschraube

SHI Produktpass-Nr.:
2462-10-1001

DGNB Neubau 2018

Das DGNB-System (Deutsche Gesellschaft für Nachhaltiges Bauen) bewertet die Nachhaltigkeit von Gebäuden verschiedener Art. Das System ist sowohl anwendbar für private und gewerbliche Großprojekte als auch für kleinere Wohngebäude.

Kriterium	Pos. / Relevante Bauteile / Bau-Materialien / Flächen	Betrachtete Stoffe / Aspekte	Qualitätsstufe
ENV 1.2 Risiken für die lokale Umwelt	nicht zutreffend	nicht zutreffend	nicht bewertungsrelevant

SENTINEL HOLDING
INSTITUT

Produkt:
SPAX Kohlenstoffstahlschraube

SHI Produktpass-Nr.:
2462-10-1001

BNB-BN Neubau V2015

Das Bewertungssystem Nachhaltiges Bauen ist ein Instrument zur Bewertung von Büro- und Verwaltungsgebäuden, Unterrichtsgebäuden, Laborgebäuden sowie Außenanlagen in Deutschland. Das BNB wurde vom damaligen Bundesministerium für Umwelt, Naturschutz, Bau und Reaktorsicherheit (BMUB) entwickelt und unterliegt heute dem Bundesministerium für Wohnen, Stadtentwicklung und Bauwesen.

Kriterium	Pos. / Bauprodukttyp	Betrachtete Schadstoffgruppe	Qualitätsniveau
1.1.6 Risiken für die lokale Umwelt			nicht bewertungsrelevant

SENTINEL HOLDING
INSTITUT

Produkt:
SPAX Kohlenstoffstahlschraube

SHI Produktpass-Nr.:
2462-10-1001

EU-Taxonomie

Die EU-Taxonomie klassifiziert wirtschaftliche Aktivitäten und Produkte nach ihren Umweltauswirkungen. Auf der Produktebene gibt es gemäß der EU-Verordnung klare Anforderungen zu Formaldehyd und flüchtigen organischen Verbindungen (VOC). Die Sentinel Holding Institut GmbH kennzeichnet qualifizierte Produkte, die diesen Standard erfüllen.

Kriterium	Produkttyp	Betrachtete Stoffe	Bewertung
DNSH - Vermeidung und Verminderung der Umweltverschmutzung			nicht bewertungsrelevant

SENTINEL HOLDING
INSTITUT

Produkt:
SPAX Kohlenstoffstahlschraube

SHI Produktpass-Nr.:
2462-10-1001

BREEAM DE Neubau 2018

BREEAM (Building Research Establishment Environmental Assessment Methodology) ist ein britisches Gebäudebewertungssystem, welches die Nachhaltigkeit von Neubauten, Sanierungsprojekten und Umbauten einstuft. Das Bewertungssystem wurde vom Building Research Establishment (BRE) entwickelt und zielt darauf ab, ökologische, ökonomische und soziale Auswirkungen von Gebäuden zu bewerten und zu verbessern.

Kriterium	Produktkategorie	Betrachtete Stoffe	Qualitätsstufe
Hea 02 Qualität der Innenraumluft			nicht bewertungsrelevant

SENTINEL HOLDING
INSTITUT

Produkt:
SPAX Kohlenstoffstahlschraube

SHI Produktpass-Nr.:
2462-10-1001

SPAX®

LEED v4.1

LEED (Leadership in Energy and Environmental Design) ist ein international anerkanntes Gebäudezertifizierungssystem des U.S. Green Building Council. Es zählt zu den weltweit am weitesten verbreiteten Nachhaltigkeitsstandards für Gebäude und wird insbesondere bei international ausgerichteten Projekten eingesetzt. LEED bewertet Gebäude ganzheitlich in Kategorien wie Energieeffizienz, Ressourcenschonung, Materialauswahl, Innenraumqualität und Standortqualität. Je nach erreichter Punktzahl werden die Zertifizierungsstufen LEED Certified, Silver, Gold oder Platinum vergeben.

Kriterium	Produktkategorie	Betrachtete Stoffe	Bewertung
EQ Credit: Low-Emitting Materials			nicht bewertungsrelevant

SENTINEL HOLDING
INSTITUT

Produkt:
SPAX Kohlenstoffstahlschraube

SHI Produktpass-Nr.:
2462-10-1001

Produktsiegel

In der Baubranche spielt die Auswahl qualitativ hochwertiger Materialien eine zentrale Rolle für die Gesundheit in Gebäuden und deren Nachhaltigkeit. Produktlabels und Zertifikate bieten Orientierung, um diesen Anforderungen gerecht zu werden. Allerdings besitzt jedes Zertifikat und Label eigene Prüfkriterien, die genau betrachtet werden sollten, um sicherzustellen, dass sie den spezifischen Bedürfnissen eines Bauvorhabens entsprechen.

EPD
INTERNATIONAL EPD SYSTEM

Das International EPD® System ist ein global anerkanntes Programm zur Erstellung und Veröffentlichung von Umweltproduktdeklarationen (EPDs). Es ermöglicht Unternehmen, die Umweltauswirkungen ihrer Produkte transparent darzustellen, basierend auf internationalen Normen wie ISO 14025 und der EN 15804 für Bauprodukte. Das System bietet eine standardisierte Methode zur Bewertung der ökologischen Performance von Produkten über ihren gesamten Lebenszyklus und fördert nachhaltiges Wirtschaften und ökologische Transparenz in verschiedenen Branchen.

GEPRÜFT NACHHALTIGES PRODUKT
QNG READY
SENTINEL HOLDING INSTITUT

Produkte mit dem QNG-ready Siegel des Sentinel Holding Instituts eignen sich für Projekte, für welche das Qualitätssiegel Nachhaltiges Gebäude (QNG) angestrebt wird. QNG-ready Produkte erfüllen die Anforderungen des QNG Anhangdokument 3.1.3 "Schadstoffvermeidung in Baumaterialien". Das KfW-Kreditprogramm Klimafreundlicher Neubau mit QNG kann eine höhere Fördersumme ermöglichen.

Produkt:
SPAX Kohlenstoffstahlschraube

SHI Produktpass-Nr.:
2462-10-1001

Rechtliche Hinweise

(*) Die Kriterien dieses Steckbriefs beziehen sich auf das gesamte Bauobjekt. Die Bewertung erfolgt auf der Ebene des Gebäudes. Im Rahmen einer sachgemäßen Planung und fachgerechten Installation können einzelne Produkte einen positiven Beitrag zum Gesamtergebnis der Bewertung leisten. Das Sentinel Holding Institut stützt sich einzig auf die Angaben des Herstellers.

Alle Kriterien finden Sie unter:
https://www.sentinel-holding.eu/de/Themenwelten/Pr%C3%BCfkriterien%20f%C3%BCr%20Produkte

Wir sind stolz darauf, dass die SHI-Datenbank, die erste und einzige Datenbank für Bauprodukte ist, die ihre umfassenden Prozesse sowie die Aktualität regelmäßig von dem unabhängigen Prüfunternehmen SGS-TÜV Saar überprüfen lässt.

Herausgeber

Sentinel Holding Institut GmbH
Bötzinger Str. 38
79111 Freiburg im Breisgau
Tel.: +49 761 590 481-70
info@sentinel-holding.eu
www.sentinel-holding.eu

ETA-Danmark A/S
Göteborg Plads 1
DK-2150 Nordhavn
Tel. +45 72 24 59 00
Fax +45 72 24 59 04
Internet www.etadanmark.dk

Authorised and notified according to Article 29 of the Regulation (EU) No 305/2011 of the European Parliament and of the Council of 9 March 2011

MEMBER OF EOTA

European Technical Assessment ETA-12/0114 of 2024/10/15

I General Part

Technical Assessment Body issuing the ETA and designated according to Article 29 of the Regulation (EU) No 305/2011: ETA-Danmark A/S

Trade name of the construction product:	SPAX self-tapping screws
Product family to which the above construction product belongs:	Screws for use in timber constructions
Manufacturer:	SPAX International GmbH & Co. KG Kölner Strasse 71-77 DE-58256 Ennepetal Tel. +49 23 33 799-0 Fax + 49 23 33 799-199 Internet www.spax.com
Manufacturing plant:	SPAX manufacturing facilities. Held on file by ETA-Danmark A/S
This European Technical Assessment contains:	104 pages including 5 annexes which form an integral part of the document
This European Technical Assessment is issued in accordance with Regulation (EU) No 305/2011, on the basis of:	European Assessment document (EAD) no. EAD 130118-01-0603 “Screws and threaded rods for use in timber constructions”
This version replaces:	The previous ETA with the same number issued on 2020-01-07

Translations of this European Technical Assessment in other languages shall fully correspond to the original issued document and should be identified as such.

Communication of this European Technical Assessment, including transmission by electronic means, shall be in full (excepted the confidential Annex(es) referred to above). However, partial reproduction may be made, with the written consent of the issuing Technical Assessment Body. Any partial reproduction has to be identified as such.

II SPECIFIC PART OF THE EUROPEAN TECHNICAL ASSESSMENT

1 Technical description of product and intended use

Technical description of the product
SPAX screws are self-tapping screws to be used in timber structures. They shall be threaded over a part or over the full length. SPAX threaded rods shall be threaded over the full length. The screws shall be produced from carbon steel wire for nominal diameters of 2,5 mm to 12,0 mm and from stainless steel wire for nominal diameters of 3,0 mm to 12,0 mm. SPAX threaded rods shall be produced from carbon steel wire or from stainless steel wire for a nominal diameter of 16,0 mm. Where corrosion protection is required, the material or coating shall be declared in accordance with the relevant specification given in Annex A of EN 14592.

Geometry and Material
The nominal diameter (outer thread diameter), d, of SPAX screws shall not be less than 2,5 mm and shall not be greater than 12,0 mm. The nominal diameter of SPAX threaded rods is 16 mm. The overall length of the screws, ℓ, shall not be less than 20 mm and shall not be greater than 1000 mm. The overall length of the threaded rods, ℓ, shall not be greater than 3000 mm. Other dimensions are given in Annex A.

The ratio of inner thread diameter to outer thread diameter d_i/d ranges from 0,58 to 0,68.

The screws are threaded over a minimum length ℓ_g of 4·d (i.e. $\ell_g \geq 4 \cdot d$).

The lead p (distance between two adjacent thread flanks) ranges from 0,49·d to 0,61·d.

No breaking shall be observed at a bend angle, α, of less than $(45/d^{0,7} + 20)$ degrees.

2 Specification of the intended use in accordance with the applicable EAD

The screws and threaded rods are used for connections in load bearing timber structures between members of solid timber (softwood), glued laminated timber (softwood), cross-laminated timber, and laminated veneer lumber (softwood), similar glued members, wood-based panels or steel. The screws are also used for connections in load bearing members of solid timber (hardwood), glued laminated timber (hardwood) or laminated veneer lumber (hardwood). SPAX screws with a thread over the full length and SPAX threaded rods are also used as tensile or compressive reinforcement perpendicular to the grain or as shear reinforcement in softwood members.

Furthermore, SPAX screws with diameters between 6 mm and 12 mm may also be used for the fixing of thermal insulation material on rafters.

Steel plates and wood-based panels except solid wood panels, laminated veneer lumber and cross laminated timber shall only be located on the side of the screw head. The following wood-based panels may be used:

- Plywood according to EN 636 or European Technical Assessment or national provisions that apply at the installation site
- Particleboard according to EN 312 or European Technical Assessment or national provisions that apply at the installation site
- Oriented Strand Board according to EN 300 or European Technical Assessment or national provisions that apply at the installation site
- Fibreboard according to EN 622-2 and 622-3 or European Technical Assessment (minimum density 650 kg/m³) or national provisions that apply at the installation site
- Cement bonded particleboard according to EN 634 or European Technical Assessment or national provisions that apply at the installation site
- Solid wood panels according to EN 13353 or European Technical Assessment or national provisions that apply at the installation site
- Cross laminated timber according to European Technical Assessment
- Laminated Veneer Lumber according to EN 14374 or European Technical Assessment
- Engineered wood products according to European Technical Assessment

The screws or threaded rods are intended to be used in timber connections for which requirements for mechanical resistance and stability and safety in use in the the sense of the Basic Works Requirements 1 and 4 of Regulation 305/2011 (EU) shall be fulfilled.

The design of the connections shall be based on the characteristic load-carrying capacities of the screws. The design capacities shall be derived from the characteristic capacities in accordance with Eurocode 5 or an appropriate national code.

The screws are intended for use for connections subject to static or quasi static loading.

The zinc-coated screws and threaded rods are for use in timber structures subject to the dry, internal conditions defined by the service classes 1 and 2 of EN 1995-1-1:2008 (Eurocode 5). The screws and threaded rods

made of stainless steel meet the requirements of Eurocode 5 (EN 1995-1-1:2008) for use in structures subject to the wet conditions defined as service class 3.

The provisions made in this European Technical Assessment are based on an assumed intended working life of the screws of 50 years.

The indications given on the working life cannot be interpreted as a guarantee given by the producer or Assessment Body, but are to be regarded only as a means for choosing the right products in relation to the expected economically reasonable working life of the works.

3 Performance of the product and references to the methods used for its assessment

Characteristic	Assessment of characteristic	
3.1 Mechanical resistance and stability*) (BWR1)		
Dimensions	See annex A	
Characteristic yield moment	See section 3.4	
Bending angle	No performance assessed	
Characteristic withdrawal parameter	See section 3.4	
Characteristic head pull-trough parameter of screws	See section 3.4	
Tensile strength	Characteristic value $f_{tens,k}$:	
Screws made of carbon steel	d = 2,5 mm:	1,8 kN
	d = 3,0 mm:	2,6 kN
	d = 3,5 mm:	3,8 kN
	d = 4,0 mm:	5,0 kN
	d = 4,5 mm or 4,6 mm:	6,4 kN
	d = 5,0 mm:	7,9 kN
	d = 5,6 mm:	9,9 kN
	d = 6,0 mm:	11 kN
	d = 7,0 mm:	13 kN
	d = 8,0 mm:	17 kN
	d = 10,0 mm:	28 kN
	d = 12,0 mm:	38 kN
Threaded rods made of carbon steel or stainless steel	d = 16,0 mm:	63 kN
Screws made of stainless steel	d = 3,0 mm:	2,1 kN
	d = 3,5 mm:	2,9 kN
	d = 4,0 mm:	3,8 kN
	d = 4,5 mm or 4,6 mm:	4,2 kN
	d = 5,0 mm or 5,2 mm:	4,9 kN
	d = 5,6 mm:	6,2 kN
	d = 6,0 mm:	7,1 kN
	d = 7,0 mm:	10 kN
	d = 8,0 mm:	13 kN
	d = 10,0 mm:	20 kN
	d = 12,0 mm:	28 kN
Characteristic yield strength	See section 3.4	
Insertion moment	Ratio of the characteristic torsional strength to the mean insertion moment: $f_{tor,k} / R_{tor,mean} \geq 1,5$	

Characteristic	Assessment of characteristic	
Torsional strength	Characteristic value $f_{tor,k}$:	
Screws made of carbon steel	d = 2,5 mm:	0,65 Nm
	d = 3,0 mm:	1,3 Nm
	d = 3,5 mm:	2,0 Nm
	d = 4,0 mm:	3,0 Nm
	d = 4,5 mm or 4,6 mm:	4,0 Nm
	d = 5,0 mm:	6,0 Nm
	d = 5,6 mm:	8,0 Nm
	d = 6,0 mm:	10,5 Nm
	d = 7,0 mm:	14,2 Nm
	d = 8,0 mm:	21 Nm
	d = 10,0 mm:	40 Nm
	d = 12,0 mm:	70 Nm
Screws made of stainless steel	d = 3,0 mm:	1,0 Nm
	d = 3,5 mm:	1,7 Nm
	d = 4,0 mm:	2,4 Nm
	d = 4,5 mm or 4,6 mm:	3,2 Nm
	d = 5,0 mm or 5,2 mm:	4,6 Nm
	d = 5,6 mm:	5,6 Nm
	d = 6,0 mm:	7,0 Nm
	d = 7,0 mm:	8,7 Nm
	d = 8,0 mm:	17 Nm
	d = 10 mm:	28 Nm
	d = 12 mm:	54 Nm
Screws made of stainless steel	d = 4,0 mm:	3,3 Nm
	d = 4,5 mm:	4,5 Nm
	d = 5,0 mm:	6,1 Nm
Insertion moment	Ratio of the characteristic torsional strength to the mean insertion moment:	
	$f_{tor,k} / R_{tor,mean} \geq 1,5$	
Spacing, end and edge distances of the screws or threaded rods and minimum thickness of the timber material	See annex B	
Slip modulus for mainly axially loaded screws and threaded rods	See section 3.4	
Durability against corrosion	See section 3.5	
3.2 Safety in case of fire (BWR2)		
Reaction to fire	The screws are made from steel classified as Euroclass A1 in accordance with EN 13501-1 and Commission Delegated Regulation 2016/364	
3.3 General aspects related to the performance of the product	The screws have been assessed as having satisfactory durability and serviceability when used in timber structures using the timber species described in Eurocode 5 and subject to the conditions defined by service classes 1, 2 and 3	

*) See additional information in section 3.4 – 3..

3.4 Mechanical resistance and stability

The load-carrying capacities for SPAX screws are applicable to the wood-based materials mentioned in paragraph 1 even though the term timber has been used in the following.

The characteristic lateral load-carrying capacities and the characteristic axial withdrawal capacities of SPAX screws or threaded rods should be used for designs in accordance with Eurocode 5 or an appropriate national code.

Point side penetration length must be $\ell_{ef} \geq 4 \cdot d$, where d is the outer thread diameter of the screw or threaded rod. For the fixing of thermal insulation material on top of rafters, point side penetration must be at least 40 mm, $\ell_{ef} \geq 40$ mm.

European Technical Assessments for structural members or wood-based panels must be considered where applicable.

Reductions in the cross-sectional area caused by SPAX screws or threaded rods with a diameter of 10 mm or more shall be taken into account in the member strength verification both, in the tensile and compressive area of members.

For screws in pre-drilled holes, the drill hole diameter should be considered in the member strength verification, for screws driven without pre-drilling, the inner thread diameter.

Lateral load-carrying capacity

The characteristic lateral load-carrying capacity of SPAX screws or threaded rods shall be calculated according to EN 1995-1-1 (Eurocode 5) using the outer thread diameter d as the nominal diameter of the screw. The contribution from the rope effect may be considered.

The characteristic yield moment shall be calculated from:

SPAX screws for 2,5 mm $\leq$ d $\leq$ 12,0 mm made of carbon steel:

$M_{y,k} = 0{,}15 \cdot 600 \cdot d^{2,6}$

[Nmm]

SPAX threaded rods:

$M_{y,k} = 140000$ [Nmm]

SPAX screws for 3,0 mm $\leq$ d $\leq$ 12,0 mm made of stainless steel:

$M_{y,k} = 0{,}15 \cdot 400 \cdot d^{2,6}$ [Nmm]

where

d outer thread diameter [mm]

The embedding strength for screws in non-pre-drilled holes arranged at an angle between screw axis and grain direction, $0° \leq \alpha \leq 90°$ is:

$$f_{h,k} = \frac{0{,}082 \cdot \rho_k \cdot d^{-0,3}}{2{,}5 \cdot \cos^2 \alpha + \sin^2 \alpha} \quad [N/mm^2]$$

for screws in pre-drilled holes:

$$f_{h,k} = \frac{0{,}082 \cdot \rho_k \cdot (1 - 0{,}01 \cdot d)}{2{,}5 \cdot \cos^2 \alpha + \sin^2 \alpha} \quad [N/mm^2]$$

for threaded rods in pre-drilled holes:

$$f_{h,k} = \frac{0{,}082 \cdot \rho_k \cdot (1 - 0{,}01 \cdot d)}{\left(2{,}5 \cdot \cos^2 \alpha + \sin^2 \alpha\right) \cdot \left(k_{90} \cdot \sin^2 \varepsilon + \cos^2 \varepsilon\right)}$$

[N/mm²]

Where

ρ_k characteristic timber density [kg/m³];

d outer thread diameter [mm];

α angle between screw axis and grain direction;

ε angle between force and grain direction;

k_{90} according to equation (8.33) in EN 1995-1-1.

The embedding strength for screws arranged parallel to the plane of cross laminated timber, independent of the angle between screw axis and grain direction, $0° \leq \alpha \leq 90°$, shall be calculated from:

$$f_{h,k} = 20 \cdot d^{-0,5}$$

[N/mm²]

unless otherwise specified in the technical specification (ETA or hEN) for the cross laminated timber.

Where

d outer thread diameter [mm]

The embedding strength for screws or threaded rods in the plane surface of cross laminated timber should be assumed as for solid timber based on the characteristic density of the outer layer. If relevant, the angle between force and grain direction of the outer layer should be taken into account.

The direction of the lateral force shall be perpendicular to the screw axis and parallel to the plane surface of the cross laminated timber.

For laterally loaded screws, the rules for multiple fastener connections in EN 1995-1-1, 8.3.1.1 (8) should be applied.

Axial withdrawal capacity

The characteristic axial withdrawal capacity of SPAX screws or threaded rods at an angle of $15° \leq \alpha \leq 90°$ to the grain in solid timber (softwood and hardwood with a maximum characteristic density of 730 kg/m³), glued laminated timber and cross-laminated timber members or at an angle of $30° \leq \alpha \leq 90°$ to the grain in laminated veneer lumber members (softwood and hardwood with a maximum characteristic density of 750 kg/m³) shall be calculated according to EN 1995-1-1:2008 from:

$$F_{ax,\alpha,Rk} = \frac{n_{ef} \cdot f_{ax,k} \cdot d \cdot \ell_{ef}}{1,2 \cdot \cos^2 \alpha + \sin^2 \alpha} \cdot \left(\frac{\rho_k}{350}\right)^{0,8} \quad [N]$$

Where

$F_{ax,\alpha,RK}$	characteristic withdrawal capacity of the screw at an angle α to the grain [N]
n_{ef}	effective number of screws according to EN 1995-1-1:2008
$f_{ax,k}$	Characteristic withdrawal parameter 2,5 mm ≤ d < 6,0 mm: $f_{ax,k}$ = 14,0 N/mm² 6,0 mm ≤ d ≤ 8,0 mm: $f_{ax,k}$ = 12,0 N/mm² d = 10,0 mm: $f_{ax,k}$ = 11,5 N/mm² d = 12,0 mm: $f_{ax,k}$ = 11,0 N/mm² d = 16,0 mm: $f_{ax,k}$ = 10,0 N/mm²
d	outer thread diameter [mm]
ℓ_{ef}	Penetration length of the threaded part according to EN 1995-1-1 [mm]; for the thread under the head including the head length
α	Angle between grain and screw axis
ρ_k	Characteristic density [kg/m³]

For screws penetrating more than one layer of cross laminated timber, the different layers may be taken into account proportionally.

The axial withdrawal capacity is limited by the head pull-through capacity and the tensile or compressive capacity of the screw or threaded rod.

For SPAX screws or threaded rods, the withdrawal capacity of the thread in the member with the head may be taken into account instead of the head pull-through capacity.

For axially loaded screws in tension, where the external force is parallel to the screw axes, the rules in EN 1995-1-1, 8.7.2 (8) should be applied.

For inclined screws in timber-to-timber or steel-to-timber shear connections, where the screws are arranged under an angle $30° \leq \alpha \leq 60°$ between the shear plane and the screw axis, the effective number of screws n_{ef} should be determined as follows:

For one row of n screws parallel to the load, the load-carrying capacity should be calculated using the effective number of fasteners n_{ef}, where

$$n_{ef} = \max\left\{n^{0,9}\,;\,0,9 \cdot n\right\}$$

and n is the number of inclined screws in a row. If crossed pairs of screws are used in timber-to-timber connections, n is the number of crossed pairs of screws in a row.

Note: For screws as compression reinforcement or inclined screws as fasteners in mechanically jointed beams or columns or for the fixing of thermal insulation material, $n_{ef} = n$.

Head pull-through capacity

The characteristic head pull-through capacity of SPAX screws or threaded rods shall be calculated according to EN 1995-1-1:2008 from:

$$F_{ax,\alpha,Rk} = \max\left\{\frac{f_{ax,k} \cdot d \cdot \ell_{ef}}{1,2 \cdot \cos^2 \alpha + \sin^2 \alpha}; k_t \cdot f_{head,k} \cdot d_h^2\right\} \cdot n_{ef} \cdot \left(\frac{\rho_k}{350}\right)^{0,8} \quad [N]$$

where:

$F_{ax,\alpha,RK}$	Characteristic head pull-through capacity of the connection at an angle $\alpha \geq 30°$ to the grain [N]
n_{ef}	Effective number of screws according to EN 1995-1-1:2008 For inclined screws: $n_{ef} = \max\left\{n^{0,9}\,;\,0,9 \cdot n\right\}$ (see axial withdrawal capacity)
k_t	Factor taking into account the head side member thickness t_h $k_t = 1$ for $t_h/d_h < 3$ $k_t = 1,3$ for $t_h/d_h \geq 3$
$f_{head,k}$	Characteristic head pull-through parameter [N/mm²]
d_h	Diameter of the screw head or the washer [mm]. Outer diameter of heads or washers d_h > 32 mm shall only be considered with a nominal diameter of 32 mm.
ρ_k	Characteristic density [kg/m³], for wood-based panels ρ_k = 380 kg/m³

Characteristic head pull-through parameter for SPAX screws with countersunk or hexagon head without flange in connections with timber and in connections with wood-based panels with thicknesses above 20 mm:

$d_h \leq 16$ mm: $f_{head,k} = 27,0 - d_h$ [N/mm²]

16 mm<d_h≤32 mm: $f_{head,k} = 11,0 - 0,2 \cdot (d_h - 16)$ [N/mm²]

Characteristic head pull-through parameter for SPAX screws with washer head, pan head, hexagon head with flange, countersunk head with washer or with second thread under the head in connections with timber and in connections with wood-based panels with thicknesses above 20 mm:

$d_h \leq 16$ mm: $f_{head,k} = 29{,}0 - d_h$ [N/mm²]
16 mm < $d_h \leq 22$ mm: $f_{head,k} = 13{,}0$ [N/mm²]
22 mm < $d_h \leq 32$ mm: $f_{head,k} = 16{,}0 - 0{,}5 \cdot (d_h - 16)$ [N/mm²]

Where
d_h head or washer diameter [mm]

Characteristic head pull-through parameter for screws in connections with wood-based panels with thicknesses between 12 mm and 20 mm:
$f_{head,k} = 8$ N/mm²

Screws in connections with wood-based panels with a thickness below 12 mm (minimum thickness of the wood based panels of 1,2·d with d as outer thread diameter):
$f_{head,k} = 8$ N/mm²
limited to $F_{ax,Rk} = 400$ N

For partially threaded screws with smooth shank under the head, the head or washer diameter shall be equal or greater than 1,8 · ds, where ds is the smooth shank or the wire diameter. Otherwise the characteristic head pull-through capacity $F_{ax,\alpha,Rk} = 0$ for screws with a smooth shank under the head.

The minimum thickness of wood-based panels according to the clause 2.1 must be observed.

In steel-to-timber connections the head pull-through capacity is not governing.

Tensile capacity
The characteristic tensile capacity $f_{tens,k}$ of SPAX screws made of carbon steel or threaded rods made of carbon steel or stainless steel is:

d = 2,5 mm:	1,8 kN
d = 3,0 mm:	2,6 kN
d = 3,5 mm:	3,8 kN
d = 4,0 mm:	5,0 kN
d = 4,5 mm or 4,6 mm:	6,4 kN
d = 5,0 mm or 5,2 mm:	7,9 kN
d = 5,6 mm:	9,9 kN
d = 6,0 mm:	11 kN
d = 7,0 mm:	13 kN
d = 8,0 mm:	17 kN
d = 10,0 mm:	28 kN
d = 12,0 mm:	38 kN
Threaded rods d = 16 mm:	63 kN

The characteristic tensile capacity $f_{tens,k}$ of SPAX screws made of stainless steel is:

d = 3,0 mm:	2,1 kN
d = 3,5 mm:	2,9 kN
d = 4,0 mm:	3,8 kN
d = 4,5 mm or 4,6 mm:	4,2 kN
d = 5,0 mm or 5,2 mm:	4,9 kN
d = 5,6 mm:	6,2 kN
d = 6,0 mm:	7,1 kN
d = 7,0 mm:	10 kN
d = 8,0 mm:	13 kN
d = 10,0 mm:	20 kN
d = 12,0 mm:	28 kN

The tear-off capacity of the screw head is greater than the tensile capacity of the screw.

Compressive capacity
The design compressive capacity $F_{ax,Rd}$ of SPAX screws or threaded rods with full thread along the length embedded in timber shall be calculated from:

$$F_{ax,Rd} = \min \left\{ \frac{f_{ax,d} \cdot d \cdot \ell_{ef}}{1{,}2 \cdot \cos^2 \alpha + \sin^2 \alpha} \cdot \left(\frac{\rho_k}{350} \right)^{0{,}8} \; ; \; \frac{\kappa_c \cdot N_{pl,k}}{\gamma_{M1}} \right\} \quad [N]$$

where

$$\kappa_c = \begin{cases} 1 & \text{for } \bar{\lambda}_k \leq 0{,}2 \\ \dfrac{1}{k + \sqrt{k^2 - \bar{\lambda}_k^2}} & \text{for } \bar{\lambda}_k > 0{,}2 \end{cases}$$

$$k = 0{,}5 \cdot \left[1 + 0{,}49 \cdot (\bar{\lambda}_k - 0{,}2) + \bar{\lambda}_k^2 \right]$$

The relative slenderness ratio shall be calculated from:

$$\bar{\lambda}_k = \sqrt{\frac{N_{pl,k}}{N_{ki,k}}}$$

Where

$$N_{pl,k} = \pi \cdot \frac{d_1^2}{4} \cdot f_{y,k} \quad [N]$$

is the characteristic value for the axial capacity in case of plastic analysis referred to the inner thread cross section

Characteristic yield strength:
$f_{y,k}$ = 1000 [N/mm²]
for SPAX screws made of carbon steel

$f_{y,k}$ = 500 [N/mm²]
for SPAX threaded rods and SPAX screws made of stainless steel

Characteristic ideal elastic buckling load:

$$N_{ki,k} = \sqrt{c_h \cdot E_S \cdot I_S} \quad [N]$$

Elastic foundation of the screw:

$$c_h = (0{,}19 + 0{,}012 \cdot d) \cdot \rho_k \cdot \left(\frac{\alpha}{180°} + 0{,}5\right)$$

[N/mm²]

for screws in cross-laminated timber, the most unfavourable combination of α and ρ_k governs;

Modulus of elasticity:

E_s = 210000 [N/mm²]

ρ_k = characteristic density [kg/m³]

Second moment of area:

$$I_S = \frac{\pi}{64} \cdot d_1^4 \quad [mm^4]$$

d_1 = inner thread diameter [mm]

(d_2 in the drawings in the annex)

α = angle between grain and screw axis

Note: When determining design values of the compressive capacity it should be considered that $f_{ax,d}$ is to be calculated using k_{mod} and γ_M for timber according to EN 1995 while $N_{pl,d}$ is calculated using $\gamma_{M,1}$ for steel buckling according to EN 1993.

Combined laterally and axially loaded screws or threaded rods

For connections subjected to a combination of axial and lateral load, the following expression should be satisfied:

$$\left(\frac{F_{ax,Ed}}{F_{ax,Rd}}\right)^2 + \left(\frac{F_{la,Ed}}{F_{la,Rd}}\right)^2 \leq 1$$

where

$F_{ax,Ed}$ axial design load of the screw or threaded rod

$F_{la,Ed}$ lateral design load of the screw or threaded rod

$F_{ax,Rd}$ design load-carrying capacity of an axially loaded screw or threaded rod

$F_{la,Rd}$ design load-carrying capacity of a laterally loaded screw or threaded rod

Slip modulus

The axial slip modulus K_{ser} of a screw for the serviceability limit state should be taken independent of angle α to the grain as:

$$C = K_{ser} = 25 \cdot d \cdot \ell_{ef} \quad [N/mm]$$

Where

d outer thread diameter [mm]

ℓ_{ef} penetration length in the structural member [mm]

Compression reinforcement

See annex C.

Tensile reinforcement

See annex D.

Shear reinforcement

See annex E.

Thermal insulation material on top of rafters

See annex F.

3.5 Related aspects of serviceability

3.5.1 Corrosion protection in service class 1, 2 and 3.

The SPAX screws and threaded rods are produced from carbon wire. They are brass-plated, nickel-plated bronze finished or electro-galvanised and e.g. yellow or blue chromated with thicknesses of the zinc coating from 4 – 16 µm or have a zinc flake coating with thicknesses from 10 – 20 µm. Steel no. 1.4016, 1.4062, 1.4401, 1.4567, 1.4578, 1.4529, 1.4539 and 1.4301 is used for screws made from stainless steel.

3.6 General aspects related to the intended use of the product

The screws or threaded rods are manufactured in accordance with the provisions of the European Technical Assessment using the automated manufacturing process as identified during the inspection of the plant by the assessment body issuing the ETA and the approved body and laid down in the technical documentation.

The installation shall be carried out in accordance with Eurocode 5 or an appropriate national code unless otherwise is defined in the following. Instructions from SPAX International GmbH & Co. KG should be considered for installation.

The screws or threaded rods are used for connections in load bearing members of solid timber (softwood), glued laminated timber (softwood), cross-laminated timber (minimum diameter d = 6,0 mm), and laminated veneer lumber, similar glued members, wood-based panels or steel members. The screws are also used for connections in load bearing members of solid timber (hardwood) or glued laminated timber (hardwood).

The screws or threaded rods may be used for connections in load bearing timber structures with structural members according to an associated European Technical Assessment, if according to the associated European Technical Assessment of the structural member a connection in load bearing timber structures with screws

according to a European Technical Assessment is allowed.

SPAX fully threaded screws or threaded rods are also used as tensile or compressive reinforcement perpendicular to the grain or as shear reinforcement in softwood members.

Furthermore, the screws with diameters between 6 mm and 12 mm may also be used for the fixing of thermal insulation material on top of rafters.

A minimum of two screws or threaded rods should be used for connections in load bearing timber structures. This does not apply for reinforcements or other situations specified in National Annexes to EN 1995-1-1.

The minimum penetration depth in structural members made of solid, glued or cross-laminated timber is 4·d.

Wood-based panels and steel plates should only be arranged on the side of the screw head. The minimum thickness of wood-based panels should be 1,2·d. Furthermore, the minimum thickness for following wood-based panels should be:

- Plywood, Fibreboards: 6 mm
- Particleboards, OSB, Cement Particleboards: 8 mm
- Solid wood panels: 12 mm

For structural members according to European Technical Assessments the terms of the European Technical Assessments must be considered.

If screws with an outer thread diameter d ≥ 8 mm are used in load bearing timber structures, the structural solid or glued laminated timber, laminated veneer lumber and similar glued members must be from spruce, pine or fir. This does not apply for screws or threaded rods in pre-drilled holes.

The screws shall be driven into softwood without pre-drilling or after pre-drilling. The screws shall be driven into hardwood with a maximum characteristic density of 750 kg/m³ and the threaded rods into softwood after pre-drilling. The drill hole diameters are:

Outer thread diameter	Drill hole diameter	
	Softwood	Hardwood
4,0	2,5	3,0
4,5	3,0	3,0
4,6	3,0	3,0
5,0	3,0	3,5
5,2	3,0	3,5
5,6	3,0	4,0
6,0	4,0	4,0
7,0	4,0	5,0
8,0	5,0	6,0
10,0	6,0	7,0
12,0	7,0	8,0
16,0	13,0	-

The hole diameter in steel members must be predrilled with a suitable diameter.

Only the equipment prescribed by SPAX GmbH & Co. KG shall be used for driving the screws.

In connections with screws with countersunk head according to Annex A the head must be flush with the surface of the connected structural member. A deeper countersink is not allowed.

Unless otherwise specified, minimum thickness for non-predrilled structural members is t = 24 mm for screws with outer thread diameter d < 8 mm, t = 30 mm for screws with outer thread diameter d = 8 mm, t = 40 mm for screws with outer thread diameter d = 10 mm and t = 80 mm for screws with outer thread diameter d = 12 mm.

Minimum distances from loaded or unloaded ends must be 15·d for screws in non-predrilled holes with outer thread diameter d ≥ 8 mm and timber thickness t < 5·d.

Minimum distances from the unloaded edge perpendicular to the grain may be reduced to 3·d also for timber thickness t < 5·d, if the spacing parallel to the grain and the end distance is at least 25·d.

For Douglas fir members minimum spacing and distances parallel to the grain shall be increased by 50%.

For structural timber members, minimum spacing and distances for screws in predrilled holes are given in EN 1995-1-1:2008 (Eurocode 5) clause 8.3.1.2 and table 8.2 as for nails in predrilled holes. These minimum spacing and distances also apply for SPAX screws with CUT or 4CUT drill tip in non-predrilled holes. Here, the outer thread diameter d must be considered. For SPAX screws with CUT or 4CUT drill tip in non-predrilled holes the following conditions shall be fulfilled:

- $a_1 \geq 5 \cdot d$
- $a_{3,c} \geq 12 \cdot d$
- $a_{3,t} \geq 12 \cdot d$
- minimum cross-section ≥ 40 d²
- screws with CUT drill tip:
  $t_{min} = \max\{5 \cdot d\ ;\ 20\ mm\}$ for $d \leq 6$ mm,
  $t_{min} = 7 \cdot d$ for $d \geq 8$ mm
- screws with 4CUT drill tip:
  $t_{min} = \max\{6 \cdot d\ ;\ 20\ mm\}$ for $d \leq 6$ mm,
  $t_{min} = 7 \cdot d$ for $d \geq 8$ mm

For SPAX screws not fulfilling the above conditions or for screws in laminated veneer lumber, minimum spacing and distances are given in EN 1995-1-1:2008 clause 8.3.1.2 and Table 8.2 as for nails in non-predrilled holes.

Alternatively, minimum distances and spacing for exclusively axially loaded SPAX screws with CUT or 4CUT drill tip or with $d \leq 8$ mm in non-predrilled holes in members of solid timber, glued laminated timber or similar glued products with a minimum thickness $t = 12 \cdot d$ may be taken as:

Spacing a_1 parallel to the grain $a_1 = 5 \cdot d$
Spacing a_2 perpendicular to the grain $a_2 = 5 \cdot d$
Distance $a_{3,c}$ from centre of the screw-part in timber to the end grain $a_{3,c} = 5 \cdot d$
Distance $a_{4,c}$ from centre of the screw-part in timber to the edge $a_{4,c} = 4 \cdot d$
Distance $a_{4,c}$ from centre of the screw-part in timber to the edge for screws with CUT or 4CUT drill tip only $a_{4,c} = 3 \cdot d$

Spacing a_2 perpendicular to the grain may be reduced from $5 \cdot d$ to $2{,}5 \cdot d$, if the condition $a_1 \cdot a_2 \geq 25 \cdot d^2$ is fulfilled.

Alternatively, minimum distances and spacing for exclusively axially loaded SPAX screws in laminated veneer members (softwood) with a minimum thickness $t = 6 \cdot d$ may be taken as:

Spacing a_1 parallel to the grain $a_1 = 5 \cdot d$
Spacing a_2 perpendicular to the grain $a_2 = 5 \cdot d$
Distance $a_{3,c}$ from centre of the screw-part in timber to the end grain $a_{3,c} = 5 \cdot d$
Distance $a_{4,c}$ from centre of the screw-part in timber to the edge $a_{4,c} = 3 \cdot d$

Spacing a_2 perpendicular to the grain may be reduced from $5 \cdot d$ to $2{,}5 \cdot d$, if the condition $a_1 \cdot a_2 \geq 25 \cdot d^2$ is fulfilled.

Unless specified otherwise in the technical specification (ETA or hEN) of cross laminated timber, minimum distances and spacing for screws in the plane surface of cross laminated timber members with a minimum thickness $t_{CLT} = 10 \cdot d$ may be taken as (see Annex B):

Spacing a_1 parallel to the grain $a_1 = 4 \cdot d$
Spacing a_2 perpendicular to the grain $a_2 = 2{,}5 \cdot d$
Distance $a_{3,c}$ from centre of the screw-part in timber to the unloaded end grain $a_{3,c} = 6 \cdot d$
Distance $a_{3,t}$ from centre of the screw-part in timber to the loaded end grain $a_{3,t} = 6 \cdot d$
Distance $a_{4,c}$ from centre of the screw-part in timber to the unloaded edge $a_{4,c} = 2{,}5 \cdot d$
Distance $a_{4,t}$ from centre of the screw-part in timber to the loaded edge $a_{4,t} = 6 \cdot d$

Unless specified otherwise in the technical specification (ETA or hEN) of cross laminated timber, minimum distances and spacing for screws in the edge surface of cross laminated timber members with a minimum thickness $t_{CLT} = 10 \cdot d$ and a minimum penetration depth perpendicular to the edge surface of $10 \cdot d$ may be taken as (see Annex B):

Spacing a_1 parallel to the CLT plane $a_1 = 10 \cdot d$
Spacing a_2 perpendicular to the CLT plane $a_2 = 4 \cdot d$
Distance $a_{3,c}$ from centre of the screw-part in timber to the unloaded end $a_{3,c} = 7 \cdot d$
Distance $a_{3,t}$ from centre of the screw-part in timber to the loaded end $a_{3,t} = 12 \cdot d$
Distance $a_{4,c}$ from centre of the screw-part in timber to the unloaded edge $a_{4,c} = 3 \cdot d$
Distance $a_{4,t}$ from centre of the screw-part in timber to the loaded edge $a_{4,t} = 6 \cdot d$

For SPAX screws or threaded rods in predrilled holes the above requirements for minimum thickness do not apply.

For crossed screw couples the minimum spacing between the crossing screws is given in Annex B.

Minimum distances and spacings for SPAX screws in mechanically jointed beams are given in Annex B.

4 Assessment and verification of constancy of performance (hereinafter AVCP) system applied, with reference to its legal base

4.1 AVCP system

According to the decision 97/176/EC of the European Commission, as amended, the system(s) of assessment and verification of constancy of performance (see Annex V to Regulation (EU) No 305/2011) is 3.

5 Technical details necessary for the implementation of the AVCP system, as foreseen in the applicable EAD

Technical details necessary for the implementation of the AVCP system are laid down in the control plan deposited at ETA-Danmark prior to CE marking.

Issued in Copenhagen on 2024-10-15 by

Thomas Bruun
Managing Director, ETA-Danmark

Annex A

Drawings, designation and material specification of SPAX screws

SPAX®-S

Flat countersunk head

Self-tapping screw with full and partial thread

Material: cold rolled wire according to SPAX - Factory Standard

Screws of high carbon steel

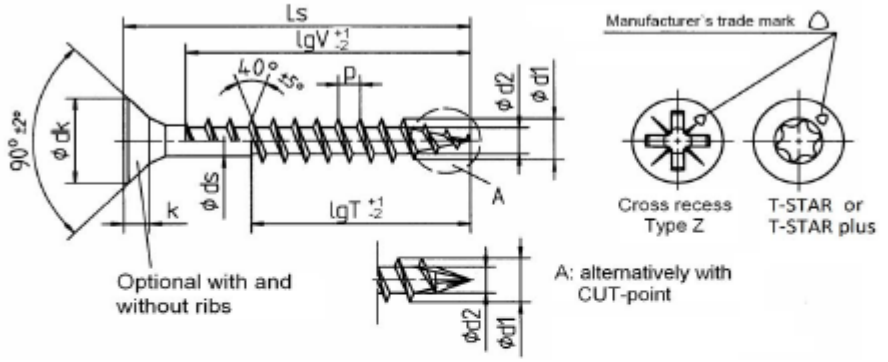

Nominal diameter			2,5	3,0		3,5		4,0		4,5		5,0		6,0	
d1	thread size		2,5	3,1		3,5		4,0		4,5		5,0		6,0	
	permissible tolerance		±0,3												
dk	head diameter		5,1	6,0		7,0		8,0		8,8		9,7		11,6	
	permissible tolerance		±0,5							±0,6					
d2	core diameter		1,7	1,9		2,2		2,5		2,8		3,2		3,8	
	permissible tolerance		-0,30	+0,15/-0,25		-0,30		±0,3							
ds	shank diameter		1,8	2,15		2,45		2,85		3,20		3,55		4,30	
	permissible tolerance		±0,10												
k	head height max.		1,6	1,8		2,1		2,4		2,7		2,9		3,4	
p	thread pitch		1,3	1,5		1,8		2,0		2,2		2,5		3,0	
	permissible tolerance		±0,1 x p												
T-STAR	size		T8	T10		T15 / T20		T20				T25		T30	
Cross recess size Type Z			1			2								3	
Ls			Standard thread lengths (full thread = lgV / partial thread = lgT)												
Nom.dim.	min	max	lgV	lgT	lgV	lgT	lgV	lgT	lgV	lgT	lgV	lgT	lgV	lgT	lgV	lgT
12	***12,0***	***13,5***	***10,0***													
15	14,0	15,5	12,0		12,5											
16	***16,0***	***17,5***	***14,0***		***14,0***											
20	18,5	20,5	17,0	12,0	17,0		16,0		16,0							
25	***23,5***	***25,5***	***22,0***	***18,0***	***22,0***	***18,0***	***21,0***	***18,0***	***21,0***		***20,0***		***20,0***			
30	28,5	30,5	27,0	18,0	26,0	18,0	25,0	18,0	25,0	18,0	25,0		25,0		24,0	
35	***33,5***	***36,0***		***22,0***	***31,0***	***23,0***	***30,0***	***23,0***	***30,0***	***23,0***	***30,0***	***25,0***	***30,0***	***25,0***	***29,0***	***24,0***
40	38,5	41,0		22,0	36,0	23,0	35,0	23,0	35,0	23,0	34,0	25,0	35,0	27,0	34,0	24,0
45	***43,5***	***46,0***		***28,0***	***36,0***	***28,0***	***40,0***	***30,0***	***40,0***	***30,0***	***39,0***	***30,0***	***39,0***	***30,0***	***38,0***	***29,0***
50	48,5	51,0				28,0	40,0	32,0	45,0	32,0	44,0	32,0	44,0	32,0	43,0	32,0
55	***53,5***	***56,0***				***36,0***		***35,0***	***50,0***	***35,0***	***49,0***	***37,0***	***49,0***	***37,0***	***48,0***	***37,0***
60	58,5	61,0						35,0	50,0	35,0	54,0	37,0	54,0	37,0	53,0	37,0
65	***63,5***	***66,0***						***40,0***		***37,5***	***59,0***	***42,0***	***59,0***	***41,0***	***58,0***	***41,0***
70	68,5	71,0								37,5	59,0	42,0	61,0	41,0	61,0	41,0
75	***73,5***	***76,0***								***37,5***		***42,0***	***61,0***	***41,0***	***61,0***	***41,0***
80	78,5	81,0								37,5		47,0	61,0	46,0	61,0	46,0
90	***88,5***	***91,5***										***47,0***		***61,0***		***61,0***
100	98,5	101,5												61,0		61,0
110	***108,5***	***111,5***												***69,0***		***68,0***
120	118,5	121,5												69,0		68,0
130	***128,0***	***132,0***														***68,0***
140	138,0	142,0														68,0
150	***148,0***	***152,0***														***68,0***
160	158,0	162,0														68,0

Screws of Ø6,0 mm with partial thread additionally in lenght of 180 to 300 mm, in steps of 20 mm, LgT= 68,0 mm

Intermediate lengths on Ls possible

Other thread lengths in the range ≥4xd1 to max. standard length permitted.

SPAX®-S

Flat countersunk head

Self-tapping screw with full and partial thread

Material: cold rolled wire according to SPAX - Factory Standard
Screws of high carbon steel

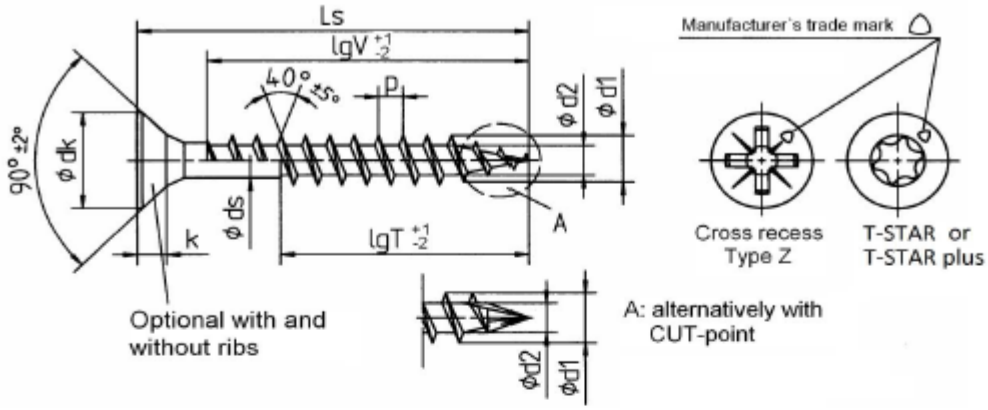

Nominal diameter		**7,0**							
d1	thread size	7,0							
	permissible tolerance	±0,35							
dk	head diameter	13,1							
	permissible tolerance	±0,65							
d2	core diameter	4,5							
	permissible tolerance	±0,3							
ds	shank diameter	4,90							
	permissible tolerance	±0,10							
k	head height max.	3,8							
p	thread pitch	3,5							
	permissible tolerance	±0,1 x p							
T - STAR size		T30							
Cross recess size Type Z		3							

Ls			Standard thread lengths (full thread = lgV / partial thread = lgT)													
Nom.dim.	min	max	lgV	lgT												
40	38,5	41,0	33,0													
45	***43,5***	***46,0***	***38,0***													
50	48,5	51,0	43,0	33,0												
55	***53,5***	***56,0***	***48,0***	***33,0***												
60	58,5	61,0	53,0	38,0												
65	***63,5***	***66,0***	***58,0***	***38,0***												
70	68,5	71,0	61,0	43,0												
75	***73,5***	***76,0***	***68,0***	***43,0***												
80	78,5	81,0	68,0	48,0												
90	***88,5***	***91,5***	***68,0***	***53,0***												
100	98,5	101,5	68,0	58,0												
110	***108,5***	***111,5***		***68,0***												
120	118,5	121,5		68,0												
130	***128,0***	***132,0***		***68,0***												
140	138,0	142,0		68,0												
150	***148,0***	***152,0***		***68,0***												
160	158,0	162,0		68,0												
180	***178,0***	***182,0***		***68,0***												
200	198,0	202,0		68,0												
bis																
400	***397,0***	***402,0***		***68,0***												

Lenghts over 200 mm to 400 mm in steps of 20 mm

Intermediate lengths on Ls possible

Other thread lengths in the range ≥4xd1 to max. standard length permitted.

Annex A2

SPAX®-S

Washer head

Self-tapping screw with full and partial thread

Material: cold rolled wire according to SPAX - Factory Standard

Screws of high carbon steel

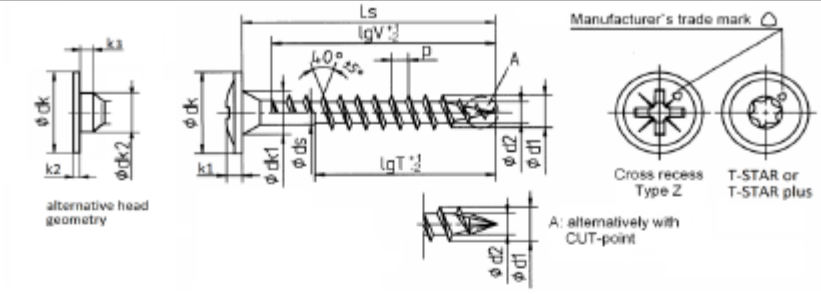

Nominal diameter			3,0	3,5	4,0	4,5	5,0	6,0
d1	thread size		3,1	3,5	4,0	4,5	5,0	6,0
	permissible tolerance		±0,3					
dk	head diameter		7,9	8,6	9,6	10,6	11,6	13,6
	permissible tolerance		±0,5	±0,6				±0,68
dk1	contersink diameter		4,9	4,9	5,0	5,4	5,9	6,9
	permissible tolerance		-0,2					
dk2	diameter		4,0	5,1	5,2	6,3	6,6	7,5
	permissible tolerance		±0,3					
d2	core diameter		1,9	2,2	2,5	2,8	3,2	3,8
	permissible tolerance		+0,15/-0,25	-0,30	±0,3			
ds	shank diameter		2,15	2,45	2,85	3,20	3,55	4,30
	permissible tolerance		±0,10					
k1	head height max.		1,5	1,8	1,9	2,0	2,2	2,4
k2	head height max.		0,9	1,0	1,3	1,5	1,5	2,0
k3	head height max.		1,2	1,3	1,5			1,8
p	thread pitch		1,5	1,8	2,0	2,2	2,5	3,0
	permissible tolerance		±0,1 x p					
T - STAR	size		T10	T15 / T20	T20		T25	T30
Cross recess size Type Z			2					

Ls			Standard thread lengths (full thread = lgV / partial thread = lgT)											
Nom.dim.	min	max	lgV	lgT	lgV	lgT	lgV	lgT	lgV	lgT	lgV	lgT	lgV	lgT
15	***14,0***	***15,5***	***13,0***											
16	16,0	17,5	15,0		15,0									
20	***18,5***	***20,5***	***18,0***	***12,5***	***18,0***		***18,0***							
25	23,5	25,5	23,0	18,0	23,0	18,0	23,0	17,0	22,5		22,0			
30	***28,5***	***30,5***	***28,0***	***18,0***	***27,0***	***18,0***	***27,5***	***18,0***	***27,5***		***27,0***		***27,0***	
35	33,5	36,0	33,0	23,0	32,0	23,0	32,5	23,0	32,5	25,0	32,0	25,0	32,0	24,0
40	***38,5***	***41,0***	***36,0***	***23,0***	***37,0***	***23,0***	***37,5***	***23,0***	***37,0***	***25,0***	***37,0***	***27,0***	***37,0***	***24,0***
45	43,5	46,0	36,0	28,0	40,0	30,0	42,5	30,0	42,0	30,0	41,0	30,0	41,0	29,0
50	***48,5***	***51,0***		***28,0***		***32,0***	***47,5***	***32,5***	***47,0***	***32,5***	***46,0***	***32,0***	***46,0***	***32,0***
55	53,5	56,0		36,0		35,0	50,0	35,0	52,0	37,0	51,0	37,0	51,0	37,0
60	***58,5***	***61,0***				***35,0***	***50,0***	***35,0***	***57,0***	***37,0***	***56,0***	***37,0***	***56,0***	***37,0***
65	63,5	66,0				40,0		37,5	59,0	42,0	61,0	41,0	61,0	41,0
70	***68,5***	***71,0***						***37,5***	***59,0***	***42,0***	***61,0***	***41,0***	***61,0***	***41,0***
75	73,5	76,0						37,5		42,0	61,0	41,0	61,0	41,0
80	***78,5***	***81,0***						***37,5***		***47,0***	***61,0***	***46,0***	***61,0***	***46,0***
90	88,5	91,5								47,0		61,0		61,0
100	***98,5***	***101,5***										***61,0***		***61,0***
110	108,5	111,5										69,0		68,0
120	***118,5***	***121,5***										***69,0***		***68,0***
130	128,0	132,0												68,0
140	***138,0***	***142,0***												***68,0***
150	148,0	152,0												68,0
160	***158,0***	***162,0***												***68,0***

Screws of Ø6,0 mm with partial thread additionally in lenght of 180 to 300 mm, in steps of 20 mm, LgT= 68,0 mm
Intermediate lengths on Ls possible

Other thread lengths in the range ≥4xd1 to max. standard length permitted.

Annex A3

	SPAX®-S Washer head	Self-tapping screw with full and partial thread Material: cold rolled wire according to SPAX - Factory Standard Screws of high carbon steel

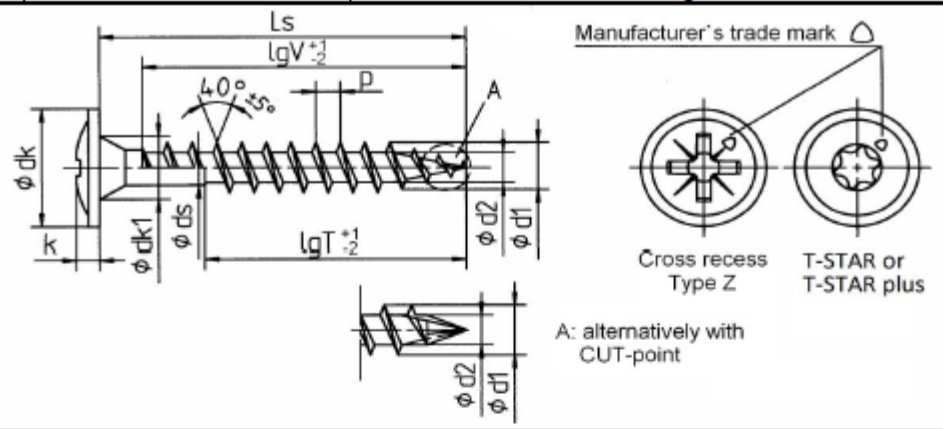

Norminal diameter		**7,0**
d1	thread size	7,0
	permissible tolerance	±0,35
dk	head diameter	18,0
	permissible tolerance	±0,9
dk1	contersink diameter	7,8
	permissible tolerance	-0,30
d2	core diameter	4,5
	permissible tolerance	±0,3
ds	shank diameter	4,90
	permissible tolerance	±0,1
k	head height max.	3,7
p	thread pitch	3,5
	permissible tolerance	±0,1 x p
T - STAR	size	T30
Cross recess size Type Z		3

Ls			Standard thread lengths (full thread = lgV / partial thread = lgT)	
Nom.dim.	min	max	lgV	lgT
50	48,5	51,0	46,0	33,0
55	***53,5***	***56,0***	***51,0***	***33,0***
60	58,5	61,0	56,0	38,0
65	***63,5***	***66,0***	***61,0***	***38,0***
70	68,5	71,0	61,0	43,0
75	***73,5***	***76,0***	***68,0***	***43,0***
80	78,5	81,0	68,0	48,0
90	***88,5***	***91,5***	***68,0***	***53,0***
100	98,5	101,5	68,0	58,0
110	***108,5***	***111,5***		***68,0***
120	118,5	121,5		68,0
130	***128,0***	***132,0***		***68,0***
140	138,0	142,0		68,0
150	***148,0***	***152,0***		***68,0***
160	158,0	162,0		68,0
180	***178,0***	***182,0***		***68,0***
200	198,0	202,0		68,0
to				
400	***397,0***	***402,0***		***68,0***

Lenghts over 200 mm to 400 mm in steps of 20 mm

Intermediate lengths on Ls possible

Other thread lengths in the range ≥4xd1 to max. standard length permitted.

Annex A4

SPAX®-S

Raised countersunk head

Self-tapping screw with full and partial thread

Material: cold rolled wire according to SPAX - Factory Standard

Screws of high carbon steel

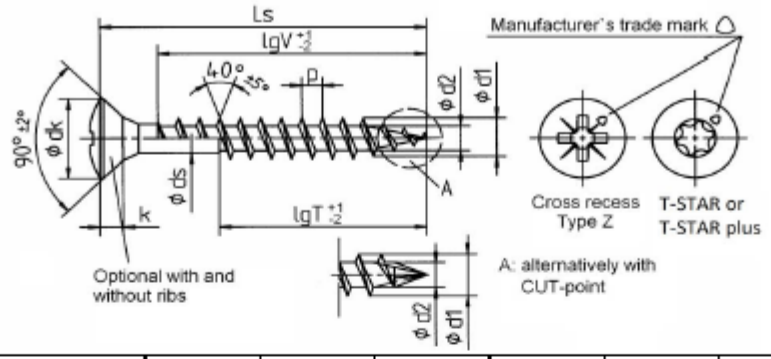

Norminal diameter		2,5	3,0	3,5	4,0	4,5	5,0	6,0
d1	thread size	2,5	3,1	3,5	4,0	4,5	5,0	6,0
	permissible tolerance	±0,3						
dk	head diameter	5,1	6,0	7,0	8,0	8,8	9,7	11,6
	permissible tolerance	±0,5				±0,6		
d2	core diameter	1,7	1,9	2,2	2,5	2,8	3,2	3,8
	permissible tolerance	-0,30	+0,15/-0,25	-0,30	±0,3			
ds	shank diameter	1,8	2,15	2,45	2,85	3,20	3,55	4,30
	permissible tolerance	±0,10						
k	head height max.	1,6	1,8	2,1	2,4	2,7	2,9	3,4
p	thread pitch	1,3	1,5	1,8	2,0	2,2	2,5	3,0
	permissible tolerance	±0,1 x p						
T - STAR size		T8	T10	T15 / T20	T20		T25	T30
Cross recess size Type Z		1		2				3

Ls			Standard thread lengths (full thread = lgV / partial thread = lgT)													
Nom.dim.	min	max	lgV	lgT	lgV	lgT	lgV	lgT	lgV	lgT	lgV	lgT	lgV	lgT	lgV	lgT
12	***12,0***	***13,5***	***10,0***													
15	14,0	15,5	12,0		12,5											
16	***16,0***	***17,5***	***14,0***		***14,0***											
20	18,5	20,5	17,0	12,0	17,0	12,5	16,0		16,0							
25	***23,5***	***25,5***	***22,0***	***18,0***	***22,0***	***18,0***	***21,0***	***18,0***	***21,0***		***20,0***		***20,0***			
30	28,5	30,5		18,0	26,0	18,0	25,0	18,0	25,0	18,0	25,0		25,0		24,0	
35	***33,5***	***36,0***		***22,0***	***31,0***	***23,0***	***30,0***	***23,0***	***30,0***	***22,5***	***30,0***	***25,0***	***30,0***	***25,0***	***29,0***	
40	38,5	41,0		22,0	36,0	23,0	35,0	23,0	35,0	22,5	34,0	25,0	35,0	27,0	34,0	24,0
45	***43,5***	***46,0***		***28,0***	***36,0***	***28,0***	***40,0***	***30,0***	***40,0***	***30,0***	***39,0***	***30,0***	***39,0***	***30,0***	***38,0***	***29,0***
50	48,5	51,0				28,0	40,0	32,0	45,0	32,0	44,0	32,0	44,0	32,0	43,0	32,0
55	***53,5***	***56,0***				***36,0***		***35,0***	***50,0***	***35,0***	***49,0***	***37,0***	***49,0***	***37,0***	***48,0***	***37,0***
60	58,5	61,0						35,0	50,0	35,0	54,0	37,0	54,0	37,0	53,0	37,0
65	***63,5***	***66,0***						***40,0***		***37,5***	***59,0***	***42,0***	***59,0***	***41,0***	***58,0***	***41,0***
70	68,5	71,0								37,5	59,0	42,0	61,0	41,0	61,0	41,0
75	***73,5***	***76,0***								***37,5***		***42,0***	***61,0***	***41,0***	***61,0***	***41,0***
80	78,5	81,0								37,5		47,0	61,0	46,0	61,0	46,0
90	***88,5***	***91,5***										***47,0***		***61,0***		***61,0***
100	98,5	101,5												61,0		61,0
110	***108,5***	***111,5***												***69,0***		***68,0***
120	118,5	121,5												69,0		68,0
130	***128,0***	***132,0***														***68,0***
140	138,0	142,0														68,0
150	***148,0***	***152,0***														***68,0***
160	158,0	162,0														68,0

Screws of Ø6,0 mm with partial thread additionally in lenght of 180 to 300 mm, in steps of 20 mm, LgT= 68,0 mm

Intermediate lengths on Ls possible

Other thread lengths in the range ≥4xd1 to max. standard length permitted.

SPAX®-S

Raised countersunk head

Self-tapping screw with full and partial thread

Material: cold rolled wire according to SPAX - Factory Standard

Screws of high carbon steel

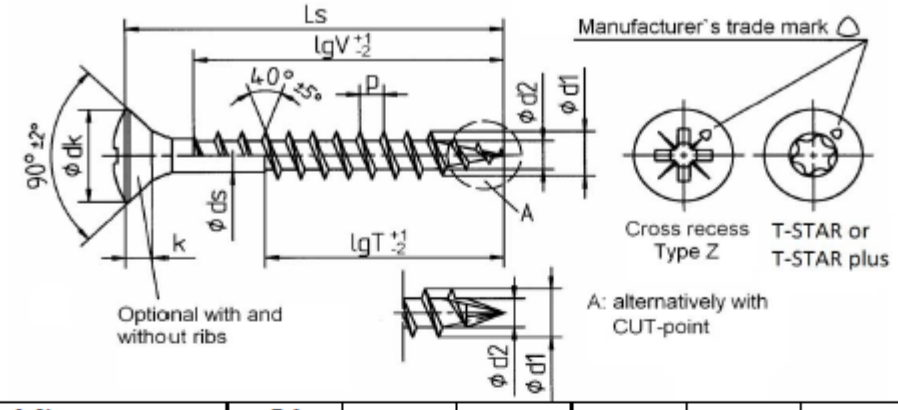

Norminal diameter			**7,0**														
d1	thread size		7,0														
	permissible tolerance		±0,35														
dk	head diameter		13,1														
	permissible tolerance		±0,65														
d2	core diameter		4,5														
	permissible tolerance		±0,3														
ds	shank diameter		4,90														
	permissible tolerance		±0,10														
k	head height max.		3,8														
p	thread pitch		3,5														
	permissible tolerance		±0,1 x p														
T - STAR	size		T30														
Cross recess size Type Z			3														
Ls			Standard thread lengths (full thread = lgV / partial thread = lgT)														
Nom.dim.	min	max	lgV	lgT													
40	38,5	41,0	33,0														
45	***43,5***	***46,0***	***38,0***														
50	48,5	51,0	43,0	33,0													
55	***53,5***	***56,0***	***48,0***	***33,0***													
60	58,5	61,0	53,0	38,0													
65	***63,5***	***66,0***	***58,0***	***38,0***													
70	68,5	71,0	61,0	43,0													
75	***73,5***	***76,0***	***68,0***	***43,0***													
80	78,5	81,0	68,0	48,0													
90	***88,5***	***91,5***	***68,0***	***53,0***													
100	98,5	101,5	68,0	58,0													
110	***108,5***	***111,5***		***68,0***													
120	118,5	121,5		68,0													
130	***128,0***	***132,0***		***68,0***													
140	138,0	142,0		68,0													
150	***148,0***	***152,0***		***68,0***													
160	158,0	162,0		68,0													
180	***178,0***	***182,0***		***68,0***													
200	198,0	202,0		68,0													
to																	
400	***397,0***	***402,0***		***68,0***													

Lenghts over 200 mm to 400 mm in steps of 20 mm

Intermediate lengths on Ls possible

Other thread lengths in the range ≥4xd1 to max. standard length permitted.

Annex A6

SPAX®-S

Pan head

Self-tapping screw with full and partial thread

Material: cold rolled wire according to SPAX - Factory Standard

Screws of high carbon steel

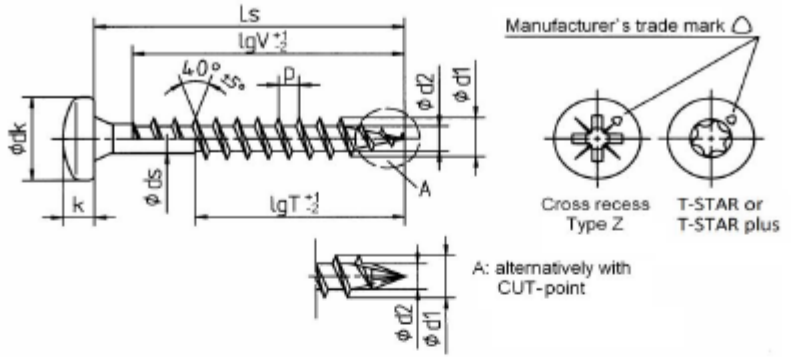

Nominal diameter			2,5	3,0	3,5	4,0	4,5	5,0	6,0
d1	thread size		2,5	3,1	3,5	4,0	4,5	5,0	6,0
	permissible tolerance		±0,3						
dk	head diameter		5,0	6,0	7,0	8,0	9,0	9,9	11,9
	permissible tolerance		±0,5				±0,6		
d2	core diameter		1,7	1,9	2,2	2,5	2,8	3,2	3,8
	permissible tolerance		-0,30	+0,15/-0,25	-0,30	±0,3			
ds	shank diameter		1,8	2,15	2,45	2,85	3,20	3,55	4,30
	permissible tolerance		±0,10						
k	head height max.		2,1	2,3	2,7	2,9	3,1	3,4	4,0
p	thread pitch		1,3	1,5	1,8	2,0	2,2	2,5	3,0
	permissible tolerance		±0,1 x p						
T-STAR	size		T8	T10	T15 / T20	T20		T25	T30
Cross recess size Type Z			1		2				3
Ls			Standard thread lengths (full thread = lgV / partial thread = lgT)						
Nom.dim.	min	max	lgV lgT	lgV lgT	lgV lgT	lgV lgT	lgV lgT	lgV lgT	lgV lgT
12	***12,0***	***13,5***	***12,0***						
15	14,0	15,5	13,0	13,0					
16	***16,0***	***17,5***	***15,0***	***15,0***	***15,0***				
20	18,5	20,5	18,0 12,0	18,0	18,0	18,0			
25	***23,5***	***25,5***	***23 18,0***	***23,0***	***23,0 18,0***	***23,0***	***22,5***	***22,0***	
30	28,5	30,5	28,0 18,0	28,0 18,0	27,0 18,0	27,5 18,0	27,5	27,0	27,0
35	***33,5***	***36,0***	***22,0***	***33,0 23,0***	***32,0 23,0***	***32,5 23,0***	***32,5 25,0***	***32,0 25,0***	***32,0 24,0***
40	38,5	41,0	22,0	36,0 23,0	37,0 23,0	37,5 23,0	37,0 25,0	37,0 27,0	37,0 24,0
45	***43,5***	***46,0***	***28,0***	***36,0 28,0***	***30,0***	***42,5 30,0***	***42,0 30,0***	***41,0 30,0***	***41,0 29,0***
50	48,5	51,0		28,0	32,0	47,5 32,5	47,0 32,5	46,0 32,0	46,0 32,0
55	***53,5***	***56,0***		***36,0***	***35,0***	***50,0 35,0***	***52,0 37,0***	***51,0 37,0***	***51,0 37,0***
60	58,5	61,0			35,0	50,0 35,0	57,0 37,0	56,0 37,0	56,0 37,0
65	***63,5***	***66,0***			***40,0***		***37,5 59,0***	***42,0 61,0***	***41,0 60,0 41,0***
70	68,5	71,0					37,5 59,0	42,0 61,0	41,0 60,0 41,0
75	***73,5***	***76,0***					***37,5***	***42,0 61,0***	***41,0 60,0 41,0***
80	78,5	81,0					37,5	47,0 61,0	46,0 60,0 46,0
90	***88,5***	***91,5***						***47,0***	***61,0 61,0***
100	98,5	101,5							61,0 61,0
110	***108,5***	***111,5***							***69,0 68,0***
120	118,5	121,5							69,0 68,0
130	***128,0***	***132,0***							***68,0***
140	138,0	142,0							68,0
150	***148,0***	***152,0***							***68,0***
160	158,0	162,0							68,0

Screws of Ø6,0 mm with partial thread additionally in lenght of 180 to 300 mm, in steps of 20 mm, LgT= 68,0 mm

Intermediate lengths on Ls possible

Other thread lengths in the range ≥4xd1 to max. standard length permitted.

Annex A7

SPAX®-S
Pan head

Self-tapping screw with full and partial thread

Material: cold rolled wire according to SPAX - Factory Standard
Screws of high carbon steel

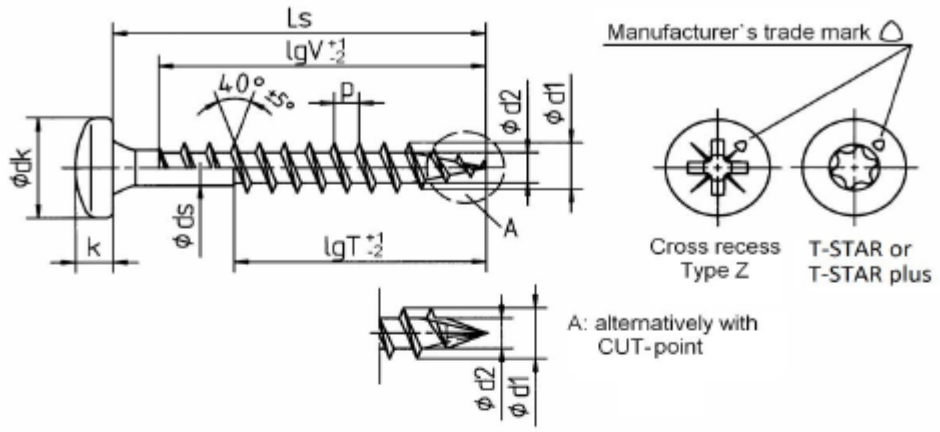

Nominal diameter		**7,0**							
d1	thread size	7,0							
	permissible tolerance	±0,35							
dk	head diameter	13,5							
	permissible tolerance	±0,65							
d2	core diameter	4,5							
	permissible tolerance	±0,3							
ds	shank diameter	4,90							
	permissible tolerance	±0,10							
k	head height max.	5							
p	thread pitch	3,5							
	permissible tolerance	±0,1x p							
T-STAR	size	T30							
Cross recess size Type Z		3							

Ls			Standard thread lengths (full thread = lgV / partial thread = lgT)	
Nom.dim.	min	max	lgV	lgT
50	48,5	51,0	46,0	33,0
55	***53,5***	***56,0***	***51,0***	***33,0***
60	58,5	61,0	56,0	38,0
65	***63,5***	***66,0***	***61,0***	***38,0***
70	68,5	71,0	61,0	43,0
75	***73,5***	***76,0***	***68,0***	***43,0***
80	78,5	81,0	68,0	48,0
90	***88,5***	***91,5***	***68,0***	***53,0***
100	98,5	101,5	68,0	58,0
110	***108,5***	***111,5***		***68,0***
120	118,5	121,5		68,0
130	***128,0***	***132,0***		***68,0***
140	138,0	142,0		68,0
150	***148,0***	***152,0***		***68,0***
160	158,0	162,0		68,0
180	***178,0***	***182,0***		***68,0***
200	198,0	202,0		68,0
to				
400	***397,0***	***402,0***		***68,0***

Screws of Ø6,0 mm with partial thread additionally in lenght of 180 to 300 mm, in steps of 20 mm, LgT= 68,0 mm

Intermediate lengths on Ls possible

Other thread lengths in the range ≥4xd1 to max. standard length permitted.

Annex A8

SPAX®-S

Countersunk head with cutting ribs

Self-tapping screw with double thread

Material: cold rolled wire according to SPAX - Factory standard
Screws of high carbon steel

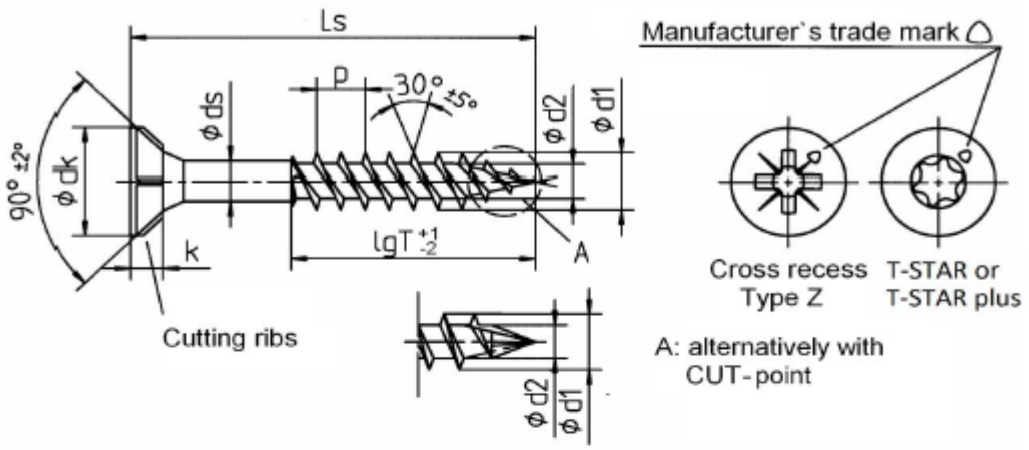

Norminal diameter						**4,0**	**4,5**		
d1	thread size					4,0	4,5		
	permissible tolerance					±0,3			
dk	head diameter					8,0	8,8		
	permissible tolerance					±0,5	±0,6		
d2	core diameter					2,5	2,8		
	permissible tolerance					±0,3			
ds	shank diameter					2,85	3,20		
	permissible tolerance					±0,10			
k	head height max.					2,4	2,7		
p	thead pitch					3,3	3,5		
	permissible tolerance					±0,1 x p			
T - STAR	size					T20			
Cross recess size Type Z						2			
Ls			Standard thread lenghts (partial thread = lgT)						
Nom.dim.	min	max				lgT	lgT		
35	33,5	36,0				22,5	24,0		
40	***38,5***	***41,0***				***22,5***	***24,0***		
45	43,5	46,0				30,0	29,0		
50	***48,5***	***51,0***				***30,0***	***29,0***		
55	53,5	56,0				35,0	34,0		
60	***58,5***	***61,0***				***35,0***	***34,0***		
65	63,5	66,0				37,5	42,0		
70	***68,5***	***71,0***				***37,5***	***42,0***		
75	73,5	76,0				50,0	49,0		
80	***78,5***	***81,0***					***49,0***		
90	88,5	91,5					49,0		

Intermediate lengths on Ls possible

Other thread lengths in the range ≥4xd1 to max. standard length permitted

Annex A9

SPAX®-S

Countersunk with head hole

Self-tapping screw with full thread

Material: cold rolled wire according to SPAX - Factory Standard

Screws of high carbon steel

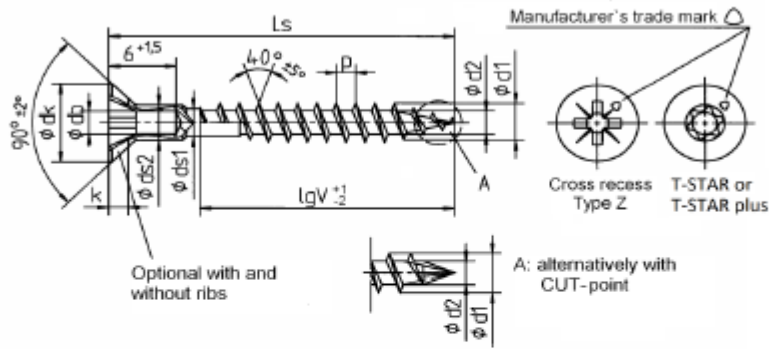

Nominal diameter					4,0	4,5	5,0	6,0
d1	thread size				4,0	4,5	5,0	6,0
	permissible tolerance				± 0,3			
dk	head diameter				8,0	8,8	9,7	11,6
	permissible tolerance				±0,5	±0,6		
db	hole diameter				2,50			
	permissible tolerance				± 0,15			
d2	core diameter				2,5	2,8	3,2	3,8
	permissible tolerance				±0,3			
ds1	shank diameter				2,85	3,20	3,55	4,30
	permissible tolerance				± 0,10			
ds2	shank diameter				3,60	3,80	4,10	ohne
	permissible tolerance				±0,10		±0,2	
k	head height max.				2,4	2,7	2,9	3,4
p	thread pitch				2,0	2,2	2,5	3,0
	permissible tolerance				± 0,1 x p			
Cross recess size Z					2			3
T-STAR (plus) size					T20			T30
Ls			Standard thread lengths (full thread = lgV)					
Nom.dim.	min	max			lgV	lgV	lgV	lgV
25	23,5	26,0			18,0			
30	***28,5***	***31,0***			***23,0***	***20,0***		
35	33,5	36,0			27,5	25,0		
40	***38,5***	***41,0***			***32,5***	***30,0***	***30,0***	
45	43,5	46,0			37,5	34,0	35,0	
50	***48,5***	***51,0***			***42,5***	***39,0***	***39,0***	***41,0***
55	53,5	56,0			47,5	44,0	44,0	46,0
60	***58,5***	***61,0***			***50,0***	***49,0***	***49,0***	***51,0***
65	63,5	66,0				54,0	54,0	56,0
70	***68,5***	***71,0***				***59,0***	***61,0***	***61,0***
75	73,5	76,0				59,0	61,0	61,0
80	***78,5***	***81,0***				***59,0***	***61,0***	***61,0***
90	88,5	91,5				59,0	61,0	61,0
100	***98,5***	***101,5***					***61,0***	***61,0***
110	108,5	111,5					69,0	68,0
120	***118,5***	***121,5***					***69,0***	***68,0***
130	128,0	132,0						68,0
140	***138,0***	***142,0***						***68,0***
150	148,0	152,0						68,0
160	***158,0***	***162,0***						***68,0***

Screw of Ø 6,0 mm with partial thread additionally in lengths of 180 to 300 mm , in steps of 20 mm, lgV = 68,0 mm

Other thead lengths in the range ≥4xd1 to max. standard length permitted

Intermediate lengths on Ls possible

Annex A10

SPAX®-S

Flat countersunk head

Self-tapping screw with full and partial thread

Material: cold rolled wire according to SPAX - Factory Standard
Stainless steel screws

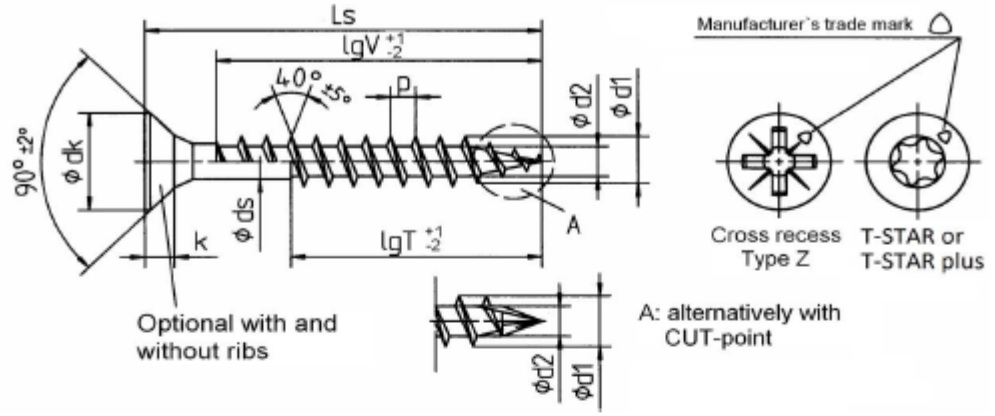

Nominal diameter			3,0	3,5	4,0	4,5	5,0	6,0
d1	thread size		3,0	3,5	4,0	4,5	5,1	6,1
	permissible tolerance		±0,3					
dk	head diameter		6,0	7,0	8,0	8,8	9,7	11,6
	permissible tolerance		±0,5			±0,6		
d2	core diameter		2,1	2,4	2,8	3,0	3,4	3,8
	permissible tolerance		-0,30	±0,3				
ds	shank diameter		2,25	2,60	3,00	3,30	3,75	4,30
	permissible tolerance		±0,10					
k	head height max.		1,8	2,1	2,4	2,7	2,9	3,4
p	thread pitch		1,5	1,8	2,0	2,2	2,5	3,0
	permissible tolerance		±0,1 x p					
T-STAR	size		T10	T15 / T20	T20		T25	T30
Cross recess size Type Z			1	2				3

Ls			Standard thread lengths (full thread = lgV / partial thread = lgT)													
Nom.dim.	min	max	lgV	lgT	lgV	lgT	lgV	lgT	lgV	lgT	lgV	lgT	lgV	lgT	lgV	lgT
15	14,0	15,5			12,5											
16	***16,0***	***17,5***			***14,0***											
20	18,5	20,5			17,0		16,0		16,0							
25	***23,5***	***25,5***			***21,0***	***18,0***	***21,0***	***18,0***	***21,0***		***20,0***		***20,0***			
30	28,5	30,5			26,0	18,0	25,0	18,0	25,0	18,0	25,0		25,0		24,0	
35	***33,5***	***36,0***			***31,0***	***23,0***	***30,0***	***23,0***	***30,0***	***23,0***	***30,0***	***25,0***	***30,0***	***25,0***	***29,0***	***24,0***
40	38,5	41,0			36,0	23,0	35,0	23,0	35,0	23,0	34,0	25,0	35,0	27,0	34,0	24,0
45	***43,5***	***46,0***			***36,0***	***28,0***	***40,0***	***30,0***	***40,0***	***30,0***	***39,0***	***30,0***	***39,0***	***30,0***	***38,0***	***29,0***
50	48,5	51,0				28,0	40,0	32,0	45,0	32,0	44,0	32,0	44,0	32,0	43,0	32,0
55	***53,5***	***56,0***				***36,0***		***35,0***	***50,0***	***35,0***	***49,0***	***37,0***	***49,0***	***37,0***	***48,0***	***37,0***
60	58,5	61,0						35,0	50,0	35,0	54,0	37,0	54,0	37,0	53,0	37,0
65	***63,5***	***66,0***						***40,0***		***37,5***	***59,0***	***42,0***	***59,0***	***41,0***	***58,0***	***41,0***
70	68,5	71,0								37,5	59,0	42,0	61,0	41,0	61,0	41,0
75	***73,5***	***76,0***								***37,5***		***42,0***	***61,0***	***41,0***	***61,0***	***41,0***
80	78,5	81,0								37,5		47,0	61,0	46,0	61,0	46,0
90	***88,5***	***91,5***										***47,0***		***61,0***		***61,0***
100	98,5	101,5												61,0		61,0
110	***108,5***	***111,5***												***69,0***		***68,0***
120	118,5	121,5												69,0		68,0
130	***128,0***	***132,0***														***68,0***
140	138,0	142,0														68,0
150	***148,0***	***152,0***														***68,0***
160	158,0	162,0														68,0

Intermediate lengths on Ls possible

Other thread lengths in the range ≥4xd1 to max. standard length permitted.

Annex A11

SPAX®-S

Flat countersunk head

Self-tapping screw with full and partial thread

Material: cold rolled wire according to SPAX - Factory Standard Stainless steel screws

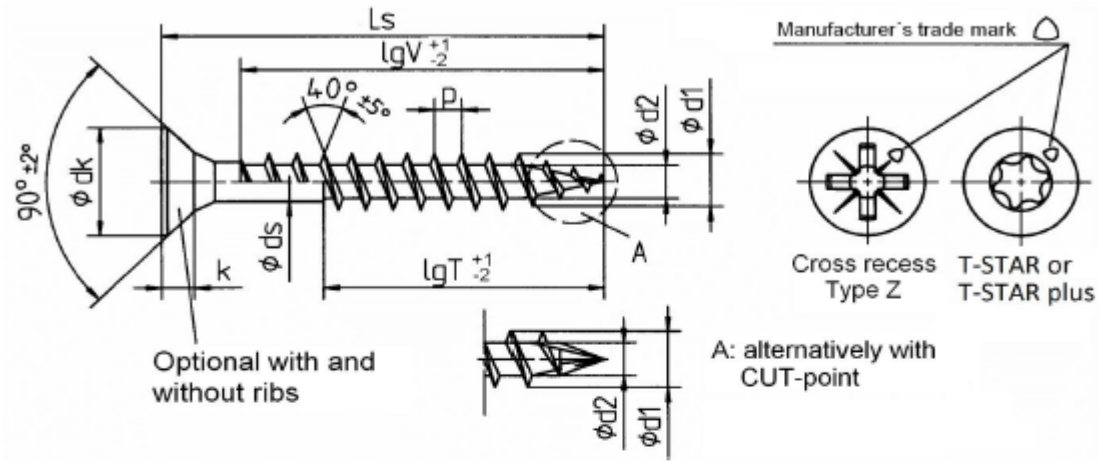

Nominal diameter		7,0
d1	thread size	7,1
	permissible tolerance	±0,35
dk	head diameter	13,1
	permissible tolerance	±0,65
d2	core diameter	4,5
	permissible tolerance	±0,3
ds	shank diameter	4,90
	permissible tolerance	±0,10
k	head height max.	3,8
p	thread pitch	3,5
	permissible tolerance	±0,1 x p
T - STAR	size	T30
Cross recess size Type Z		3

Ls			Standard thread lengths (full thread = lgV / partial thread = lgT)	
Nom.dim.	min	max	lgV	lgT
40	38,5	41,0	33,0	
45	***43,5***	***46,0***	***38,0***	
50	48,5	51,0	43,0	33,0
55	***53,5***	***56,0***	***48,0***	***33,0***
60	58,5	61,0	53,0	38,0
65	***63,5***	***66,0***	***58,0***	***38,0***
70	68,5	71,0	61,0	43,0
75	***73,5***	***76,0***	***68,0***	***43,0***
80	78,5	81,0	68,0	48,0
90	***88,5***	***91,5***	***68,0***	***53,0***
100	98,5	101,5	68,0	58,0
110	***108,5***	***111,5***		***68,0***
120	118,5	121,5		68,0

Intermediate lengths on Ls possible

Other thread lengths in the range ≥4xd1 to max. standard length permitted.

Annex A12

SPAX®-S
Washer head

Self-tapping screw with full and partial thread

Material: cold rolled wire according to SPAX - Factory Standard
Stainless steel screws

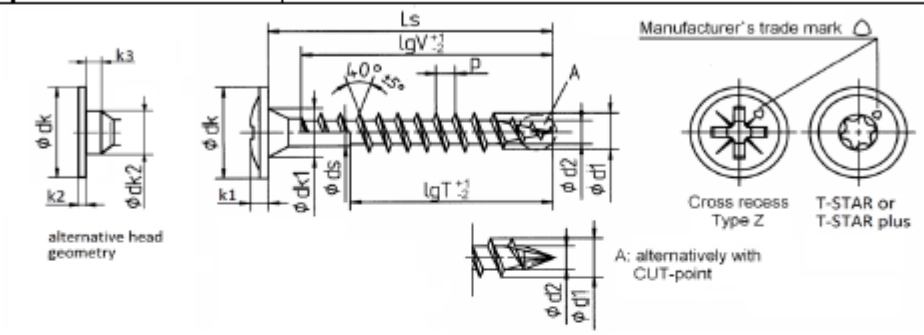

Nominal diameter			3,0	3,5	4,0	4,5	5,0	6,0
d1	thread size		3,0	3,5	4,0	4,5	5,1	6,1
	permissible tolerance		±0,3					
dk	head diameter		7,9	8,6	9,6	10,6	11,6	13,6
	permissible tolerance		±0,3	±0,6				±0,65
dk1	contersink diameter		4,9	4,9	5,0	5,4	5,9	6,9
	permissible tolerance		+0,20					
dk2	diameter		4,0	5,1	5,2	6,3	6,6	7,5
	permissible tolerance		±0,3					
d2	core diameter		2,1	2,4	2,8	3,0	3,4	3,8
	permissible tolerance		-0,30	±0,3				
ds	shank diameter		2,25	2,60	3,00	3,30	3,75	4,30
	permissible tolerance		±0,10					
k1	head height max.		1,5	1,8	1,9	2,0	2,2	2,4
k2	head height max.		0,9	1,0	1,3	1,5	1,5	2,0
k3	head height max.		1,2	1,3	1,5			1,8
p	thread pitch		1,5	1,8	2,0	2,2	2,5	3,0
	permissible tolerance		±0,1 x p					
T - STAR	size		T10	T15 / T20	T20		T25	T30
Cross recess size Type Z			2					

Ls			Standard thread lengths (full thread = lgV / partial thread = lgT)													
Nom.dim.	min	max	lgV	lgT	lgV	lgT	lgV	lgT	lgV	lgT	lgV	lgT	lgV	lgT	lgV	lgT
12	12,0	13,5	13,0													
15	***16,0***	***17,5***	***14,0***													
16	16,0	17,5	15,0		15,0											
20	***18,5***	***20,5***	***18,0***	***12,5***	***18,0***		***18,0***									
25	23,5	25,5	23,0	18,0	23,0	18,0	23,0		22,5		22,0					
30	***28,5***	***30,5***	***28,0***	***18,0***	***27,0***	***18,0***	***27,5***	***18,0***	***27,5***		***27,0***		***27,0***			
35	33,5	36,0	33,0	23,0	32,0	23,0	32,5	23,0	32,5	25,0	32,0	25,0	32,0	24,0		
40	***38,5***	***41,0***	***36,0***	***23,0***	***37,0***	***23,0***	***37,5***	***23,0***	***37,0***	***25,0***	***37,0***	***27,0***	***37,0***	***24,0***		
45	43,5	46,0	36,0	28,0		30,0	42,5	30,0	42,0	30,0	41,0	30,0	41,0	29,0		
50	***48,5***	***51,0***		***28,0***		***32,0***	***47,5***	***32,5***	***47,0***	***32,5***	***46,0***	***32,0***	***46,0***	***32,0***		
55	53,5	56,0		36,0		35,0	50,0	35,0	52,0	37,0	51,0	37,0	51,0	37,0		
60	***58,5***	***61,0***				***35,0***	***50,0***	***35,0***	***57,0***	***37,0***	***56,0***	***37,0***	***56,0***	***37,0***		
65	63,5	66,0				40,0		37,5	59,0	42,0	61,0	41,0	61,0	41,0		
70	***68,5***	***71,0***						***37,5***	***59,0***	***42,0***	***61,0***	***41,0***	***61,0***	***41,0***		
75	73,5	76,0						37,5		42,0	61,0	41,0	61,0	41,0		
80	***78,5***	***81,0***						***37,5***		***47,0***	***61,0***	***46,0***	***61,0***	***46,0***		
90	88,5	91,5								47,0		61,0		61,0		
100	***98,5***	***101,5***										***61,0***		***61,0***		
110	108,5	111,5										69,0		68,0		
120	***118,5***	***121,5***										***69,0***		***68,0***		
130	128,5	131,5												68,0		
140	***138,5***	***141,5***												***68,0***		
150	148,5	151,5												68,0		
160	***158,5***	***161,5***												***68,0***		

Intermediate lengths on Ls possible

Other thread lengths in the range ≥4xd1 to max. standard length permitted.

Annex A13

	SPAX®-S Washer head	Self-tapping screw with full and partial thread Material: cold rolled wire according to SPAX - Factory Standard Stainless steel screw

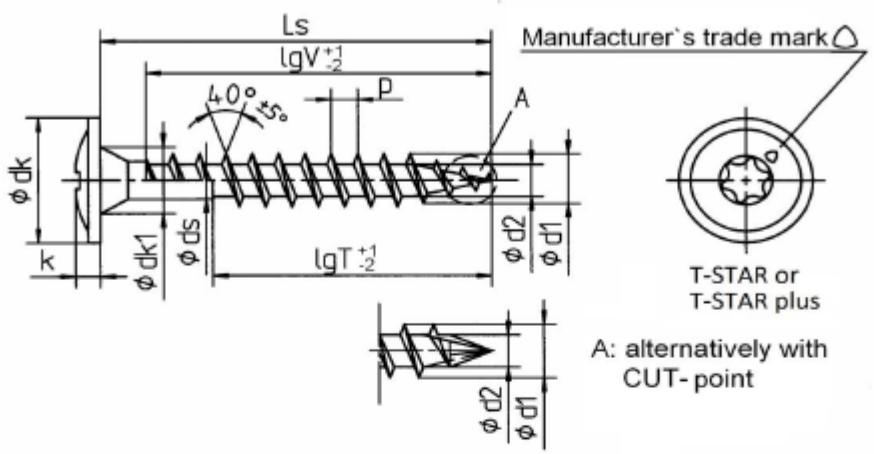

Norminal diameter			**7,0**														
d1	thread size		7,1														
	permissible tolerance		±0,35														
dk	head diameter		18,0														
	permissible tolerance		±0,9														
dk1	contersink diameter		7,8														
	permissible tolerance		-0,30														
d2	core diameter		4,5														
	permissible tolerance		±0,3														
ds	shank diameter		4,90														
	permissible tolerance		±0,10														
k	head height max.		3,7														
p	thread pitch		3,5														
	permissible tolerance		±0,1 x p														
T - STAR	size		T30														
Ls			Standard thread lengths (full thread = lgV / partial thread = lgT)														
Nom.dim.	min	max	lgV	lgT													
50	48,5	51,0	46,0	33,0													
55	***53,5***	***56,0***	***51,0***	***33,0***													
60	58,5	61,0	56,0	38,0													
65	***63,5***	***66,0***	***61,0***	***38,0***													
70	68,5	71,0	61,0	43,0													
75	***73,5***	***76,0***	***68,0***	***43,0***													
80	78,5	81,0	68,0	48,0													
90	***88,5***	***91,5***	***68,0***	***53,0***													
100	98,5	101,5	68,0	58,0													
110	***108,5***	***111,5***		***68,0***													
120	118,5	121,5		68,0													

Intermediate lengths on Ls possible

Other thread lengths in the range ≥4xd1 to max. standard length permitted.

Annex A14

SPAX®-S

Raised countersunk head

Self-tapping screw with full and partial thread

Material: cold rolled wire according to SPAX - Factory Standard

Stainless steel screws

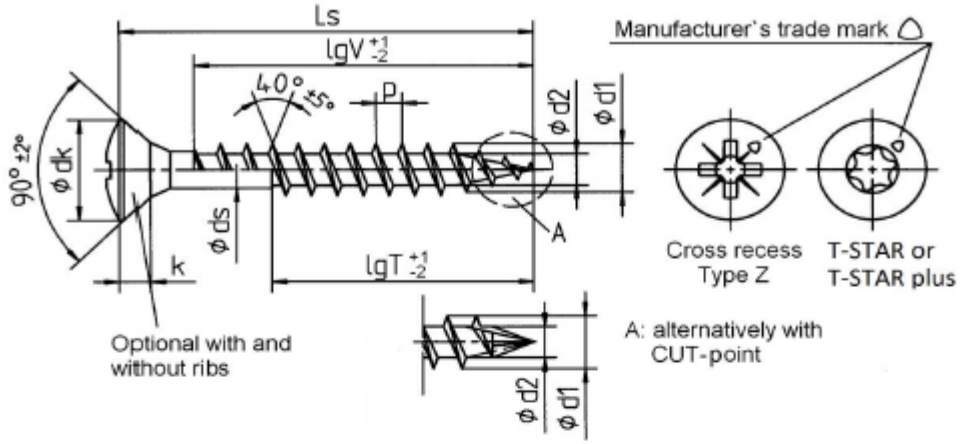

Norminal diameter			3,0	3,5	4,0	4,5	5,0	6,0
d1	thread size		3,0	3,5	4,0	4,5	5,1	6,1
	permissible tolerance		±0,3					
dk	head diameter		6,0	7,0	8,0	8,8	9,7	11,6
	permissible tolerance		±0,5			±0,6		
d2	core diameter		2,1	2,4	2,8	3,0	3,4	3,8
	permissible tolerance		-0,30	±0,3				
ds	shank diameter		2,25	2,60	3,00	3,30	3,75	4,30
	permissible tolerance		±0,10					
k	head hight max.		1,8	2,1	2,4	2,7	2,9	3,4
p	thread pitch		1,5	1,8	2,0	2,2	2,5	3,0
	permissible tolerance		±0,1 x p					
T - STAR	size		T10	T15 / T20	T20		T25	T30
Cross recess size Type Z			1	2				3

Ls			Standard thread lengths (full thread = lgV / partial thread = lgT)											
Nom.dim.	min	max	lgV	lgT	lgV	lgT	lgV	lgT	lgV	lgT	lgV	lgT	lgV	lgT
15	***14,0***	***15,5***	***12,5***											
16	16,0	17,5	14,0											
20	***18,5***	***20,5***	***17,0***	***12,5***	***16,0***		***16,0***							
25	23,5	25,5	22,0	18,0	21,0	18,0	21,0		20,0		20,0			
30	***28,5***	***30,5***	***26,0***	***18,0***	***25,0***	***18,0***	***25,0***	***18,0***	***25,0***		***25,0***		***24,0***	
35	33,5	36,0	31,0	23,0	30,0	23,0	30,0	23,0	30,0	25,0	30,0	25,0	29,0	24,0
40	***38,5***	***41,0***	***36,0***	***23,0***	***35,0***	***23,0***	***35,0***	***23,0***	***34,0***	***25,0***	***35,0***	***27,0***	***34,0***	***24,0***
45	43,5	46,0	36,0	28,0	40,0	30,0	40,0	30,0	39,0	30,0	39,0	30,0	38,0	29,0
50	***48,5***	***51,0***		***28,0***	***40,0***	***32,0***	***45,0***	***32,5***	***44,0***	***32,5***	***44,0***	***32,0***	***43,0***	***32,0***
55	53,5	56,0		36,0		35,0	50,0	35,0	49,0	37,0	49,0	37,0	48,0	37,0
60	***58,5***	***61,0***				***35,0***	***50,0***	***35,0***	***54,0***	***37,0***	***54,0***	***37,0***	***53,0***	***37,0***
65	63,5	66,0				40,0		37,5	59,0	42,0	59,0	41,0	58,0	41,0
70	***68,5***	***71,0***						***37,5***	***59,0***	***42,0***	***61,0***	***41,0***	***61,0***	***41,0***
75	73,5	76,0						37,5		42,0	61,0	41,0	61,0	41,0
80	***78,5***	***81,0***						***37,5***		***47,0***	***61,0***	***46,0***	***61,0***	***46,0***
90	88,5	91,5								47,0		61,0		61,0
100	***98,5***	***101,5***										***61,0***		***61,0***
110	108,5	111,5										69,0		68,0
120	***118,5***	***121,5***										***69,0***		***68,0***
130	128,0	132,0												68,0
140	***138,0***	***142,0***												***68,0***
150	148,0	152,0												68,0
160	***158,0***	***162,0***												***68,0***

Intermediate lengths on Ls possible

Other thread lengths in the range ≥4xd1 to max. standard length permitted.

Annex A15

SPAX®-S
Raised countersunk head

Self-tapping screw with full and partial thread

Material: cold rolled wire according to SPAX - Factory Standard
Stailness steel screw

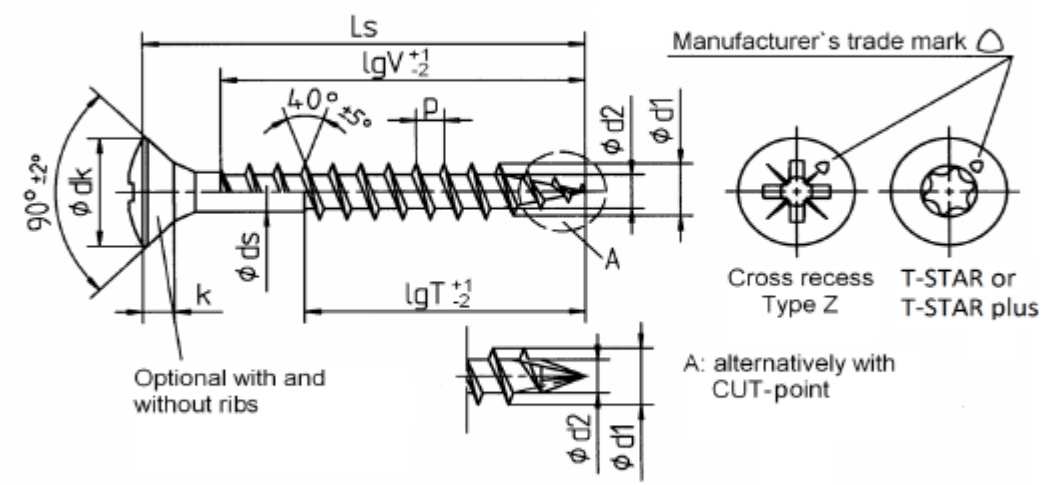

Norminal diameter			**7,0**														
d1	thread size		7,1														
	permissible tolerance		±0,35														
dk	head diameter		13,1														
	permissible tolerance		±0,65														
d2	core diameter		4,5														
	permissible tolerance		±0,3														
ds	shank diameter		4,90														
	permissible tolerance		±0,10														
k	head height max.		3,8														
p	thread pitch		3,5														
	permissible tolerance		±0,1 x p														
T - STAR	size		T30														
Cross recess size Type Z			3														
Ls			Standard thread lengths (full thread = lgV / partial thread = lgT)														
Nom dim.	min	max	lgV	lgT													
40	38,5	41,0	33,0														
45	***43,5***	***46,0***	***38,0***														
50	48,5	51,0	43,0	33,0													
55	***53,5***	***56,0***	***48,0***	***33,0***													
60	58,5	61,0	53,0	38,0													
65	***63,5***	***66,0***	***58,0***	***38,0***													
70	68,5	71,0	61,0	43,0													
75	***73,5***	***76,0***	***68,0***	***43,0***													
80	78,5	81,0	68,0	48,0													
90	***88,5***	***91,5***	***68,0***	***53,0***													
100	98,5	101,5	68,0	58,0													
110	***108,5***	***111,5***		***68,0***													
120	118,5	121,5		68,0													

Intermediate lengths on Ls possible

Other thread lengths in the range ≥4xd1 to max. standard length permitted.

Annex A16

SPAX®-S
Pan head

Self-tapping screw with full and partial thread
Material: cold rolled wire according to SPAX - Factory Standard
Stainless steel screws

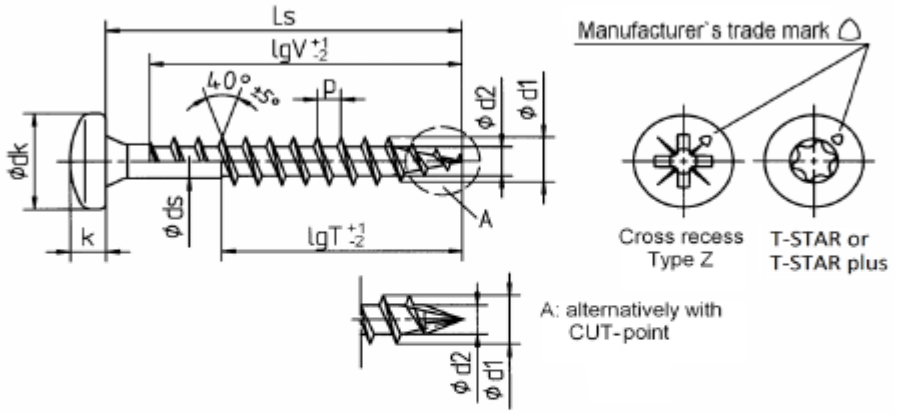

Nominal diameter			3,0	3,5	4,0	4,5	5,0	6,0
d1	thread size		3,0	3,5	4,0	4,5	5,1	6,1
	permissible tolerance		±0,3					
dk	head diameter		6,0	7,0	8,0	9,0	9,9	11,9
	permissible tolerance		±0,5			±0,6		
d2	core diameter		2,1	2,4	2,8	3,0	3,4	3,8
	permissible tolerance		-0,30	±0,3				
ds	shank diameter		2,25	2,60	3,00	3,30	3,75	4,30
	permissible tolerance		±0,10					
k	head hight max.		2,3	2,5	2,9	3,1	3,4	4,0
p	thread pitch		1,5	1,8	2,0	2,2	2,5	3,0
	permissible tolerance		±0,1 x p					
T - STAR	size		T10	T15 / T20	T20		T25	T30
Cross recess size Type Z			1	2				3

Ls Nom.dim.	min	max	lgV	lgT	lgV	lgT	lgV	lgT	lgV	lgT	lgV	lgT	lgV	lgT
			Standard thread lengths (full thread = lgV / partial thread = lgT)											
15	***14,0***	***15,5***	***13,0***											
16	16,0	17,5	15,0		15,0									
20	***18,5***	***20,5***	***18,0***	***12,5***	***18,0***		***18,0***							
25	23,5	25,5	23,0	18,0	23,0	18,0	23,0		22,5		22,0			
30	***28,5***	***30,5***	***28,0***	***18,0***	***27,0***	***18,0***	***27,5***	***18,0***	***27,5***		***27,0***		***27,0***	
35	33,5	36,0	33,0	23,0	32,0	23,0	32,5,	23,0	32,5	25,0	32,0	25,0	32,0	24,0
40	***38,5***	***41,0***	***36,0***	***23,0***	***37,0***	***23,0***	***37,5***	***23,0***	***37,0***	***25,0***	***37,0***	***27,0***	***37,0***	***24,0***
45	43,5	46,0	36,0	28,0		30,0	42,5	30,0	42,0	30,0	41,0	30,0	41,0	29,0
50	***48,5***	***51,0***		***28,0***		***32,0***	***47,5***	***32,5***	***47,0***	***32,5***	***46,0***	***32,0***	***46,0***	***32,0***
55	53,5	56,0		36,0		35,0	50,0	35,0	52,0	37,0	51,0	37,0	51,0	37,0
60	***58,5***	***61,0***				***35,0***	***50,0***	***35,0***	***57,0***	***37,0***	***56,0***	***37,0***	***56,0***	***37,0***
65	63,5	66,0				40,0		37,5	59,0	42,0	61,0	41,0	60,0	41,0
70	***68,5***	***71,0***						***37,5***	***59,0***	***42,0***	***61,0***	***41,0***	***60,0***	***41,0***
75	73,5	76,0						37,5		42,0	61,0	41,0	60,0	41,0
80	***78,5***	***81,0***						***37,5***		***47,0***	***61,0***	***46,0***	***60,0***	***46,0***
90	88,5	91,5								47,0		61,0		61,0
100	***98,5***	***101,5***										***61,0***		***61,0***
110	108,5	111,5										69,0		68,0
120	***118,5***	***121,5***										***69,0***		***68,0***
130	128,0	132,0												68,0
140	***138,0***	***142,0***												***68,0***
150	148,0	152,0												68,0
160	***158,0***	***162,0***												***68,0***

Intermediate lengths on Ls possible

Other thread lengths in the range ≥4xd1 to max. standard length permitted.

Annex A17

	SPAX®-S Pan head	Self-tapping screw with full and partial thread Material: cold rolled wire according to SPAX - Factory Standard Stainless steel screws

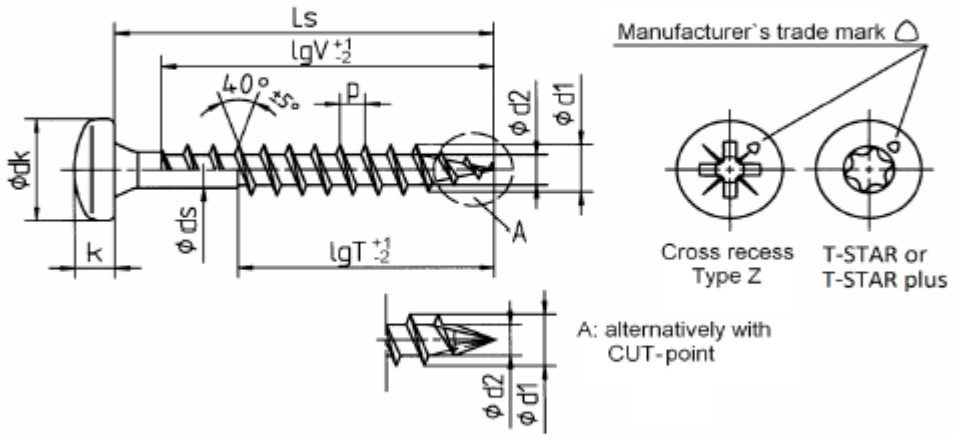

Nominal diameter		**7,0**
d1	thread size	7,1
	permissible tolerance	±0,35
dk	head diameter	13,5
	permissible tolerance	±0,65
d2	core diameter	4,5
	permissible tolerance	±0,3
ds	shank diameter	4,90
	permissible tolerance	±0,10
k	head hight max.	5
p	thread pitch	3,5
	permissible tolerance	±0,1 x p
T - STAR	size	T30
Cross recess size Type Z		3

Ls			Standard thread lengths (full thread = lgV / partial thread = lgT)	
Nom.dim.	min	max	lgV	lgT
50	48,5	51,0	46,0	33,0
55	***53,5***	***56,0***	***51,0***	***33,0***
60	58,5	61,0	56,0	38,0
65	***63,5***	***66,0***	***61,0***	***38,0***
70	68,5	71,0	61,0	43,0
75	***73,5***	***76,0***	***68,0***	***43,0***
80	78,5	81,0	68,0	48,0
90	***88,5***	***91,5***	***68,0***	***53,0***
100	98,5	101,5	68,0	58,0
110	***108,5***	***111,5***		***68,0***
120	118,5	121,5		68,0

Intermediate lengths on Ls possible

Other thread lengths in the range ≥4xd1 to max. standard length permitted.

Annex A18

SPAX®

Flat countersunk head

Self-tapping screw with full and partial thread

Material: cold rolled wire according to SPAX - Factory Standard
Screws of high carbon steel

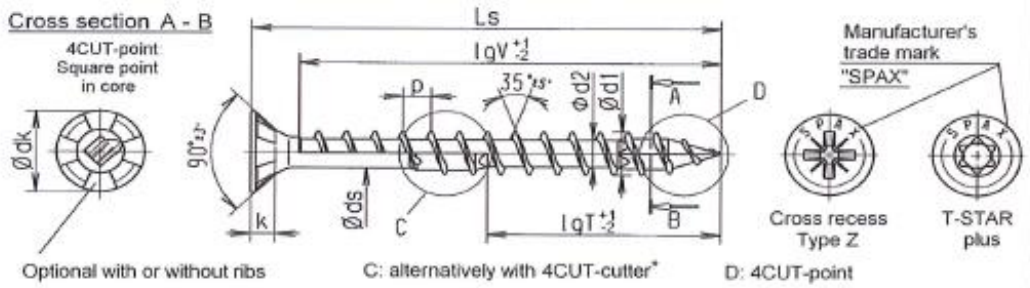

Nominal diameter				3,5	4,0	4,5	5,0	6,0
d1	thread size			3,5	4,0	4,5	5,0	6,0
	permissible tolerance			±0,3				
dk	head diameter			7,0	8,0	8,8	9,6	11,6
	permissible tolerance			±0,5		±0,6		
d2	core diameter			2,25	2,6	2,9	3,2	3,9
	permissible tolerance			+0,1/-0,3	±0,3			
ds	shank diameter			2,45	2,85	3,20	3,55	4,30
	permissible tolerance			±0,10				
k	head height max.			2,1	2,4	2,7	2,9	3,4
p	thread pitch			2,1	2,4	2,7	3,0	3,6
	permissible tolerance			±0,1 x p				
T-STAR plus size				T15 / T20	T20			T30
Cross reecess size Type Z				2				3

Ls			Standard thread lengths (full thread = lgV / partial thread = lgT)													
Nom.dim.	min	max					lgV	lgT	lgV	lgT	lgV	lgT	lgV	lgT	lgV	lgT
20	18,5	20,5					16,0		16,0							
25	***23,5***	***25,5***					***21,0***	***18,0***	***21,0***		***20,0***		***20,0***			
30	28,5	30,5					25,0	18,0	25,0	18,0	25,0		25,0		24,0	
35	***33,5***	***36,0***					***30,0***	***23,0***	***30,0***	***23,0***	***30,0***	***25,0***	***30,0***	***25,0***	***29,0***	***24,0***
40	38,5	41,0					35,0	23,0	35,0	23,0	34,0	25,0	35,0	27,0	34,0	24,0
45	***43,5***	***46,0***					***40,0***	***30,0***	***40,0***	***30,0***	***39,0***	***30,0***	***39,0***	***30,0***	***38,0***	***29,0***
50	48,5	51,0					40,0	32,0	45,0	32,5	44,0	32,5	44,0	32,0	43,0	32,0
55	***53,5***	***56,0***						***35,0***	***50,0***	***35,0***	***49,0***	***37,0***	***49,0***	***37,0***	***48,0***	***37,0***
60	58,5	61,0						35,0	50,0	35,0	54,0	37,0	54,0	37,0	53,0	37,0
65	***63,5***	***66,0***						***40,0***	***50,0***	***37,5***	***59,0***	***42,0***	***59,0***	***41,0***	***58,0***	***41,0***
70	68,5	71,0							50,0	37,5	64,0	42,0	64,0	41,0	61,0	41,0
75	***73,5***	***76,0***							***50,0***	***37,5***	***69,0***	***42,0***	***69,0***	***41,0***	***61,0***	***41,0***
80	78,5	81,0							50,0	37,5	74,0	47,0	74,0	46,0	61,0	46,0
90	***88,5***	***91,5***									***84,0***	***47,0***	***84,0***	***61,0***		***61,0***
100	98,5	101,5											94,0	61,0		61,0
110	***108,5***	***111,5***											***104,0***	***69,0****		***68,0****
120	118,5	121,5											114,0	69,0*		68,0*
130	***128,0***	***132,0***														***68,0****
140	138,0	142,0														68,0*
150	***148,0***	***152,0***														***68,0****
160	158,0	162,0														68,0*

Screws of Ø6,0 mm with partial thread additionally in lengths of 180 to 300 mm, in steps of 20 mm, LgT= 68,0 mm*

Intermediate lengths on Ls possible

Other thread lengths in the range ≥4xd1 to max. standard length permitted.

* Design C with lgT= max. 65,0 mm

Annex A19

SPAX®
Washer head

Self-tapping screw with full and partial thread

Material: cold rolled wire according to SPAX - Factory Standard
Screws of high carbon steel

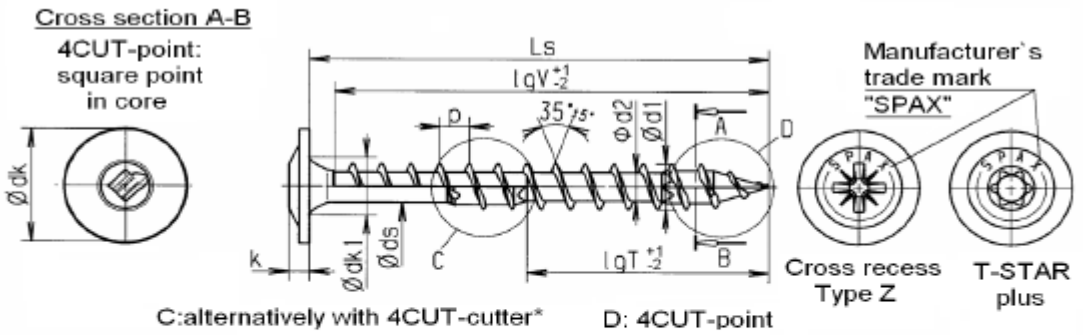

Nominal diameter							3,5	4,0	4,5	5,0	6,0
d1	thread size						3,5	4,0	4,5	5,0	6,0
	permissible tolerance						±0,3				
dk	head diameter						8,6	9,6	10,6	11,6	13,6
	permissible tolerance						±0,6				±0,65
dk1	countersink diameter						4,9	5,0	5,4	5,9	6,9
	permissible tolerance						+0,20				
d2	core diameter						2,25	2,6	2,9	3,2	3,9
	permissible tolerance						+0,1/-0,3	±0,3			
ds	shank diameter						2,45	2,85	3,2	3,55	4,3
	permissible tolerance						±0,10				
k	head height max.						1,8	1,9	2,0	2,2	3,1
p	thread pitch						2,1	2,4	2,7	3,0	3,6
	permissible tolerance						±0,1 x p				
T-STAR plus size							T15 / T20	T20			T30
Cross recess size Type Z							2				
Ls			Standard thread lengths (full thread = lgV / partial thread = lgT)								
Nom.dim.	min	max					lgV	lgT	lgV	lgT	lgV	lgT	lgV	lgT	lgV	lgT
16	***16,0***	***17,5***					***15,0***									
20	18,5	20,5					18,0		18,0							
25	***23,5***	***25,5***					***23,0***	***18,0***	***23,0***		***22,5***		***22,0***			
30	28,5	30,5					27,0	18,0	27,5	18,0	27,5		27,0		27,0	
35	***33,5***	***36,0***					***32,0***	***23,0***	***32,5***	***23,0***	***32,5***	***25,0***	***32,0***	***25,0***	***32,0***	***24,0***
40	38,5	41,0					37,0	23,0	37,5	23,0	37,0	25,0	37,0	27,0	37,0	24,0
45	***43,5***	***46,0***					***40,0***	***30,0***	***42,5***	***30,0***	***42,0***	***30,0***	***41,0***	***30,0***	***41,0***	***29,0***
50	48,5	51,0					40,0	32,0	47,5	32,5	47,0	32,5	46,0	32,0	46,0	32,0
55	***53,5***	***56,0***						***35,0***	***50,0***	***35,0***	***52,0***	***37,0***	***51,0***	***37,0***	***51,0***	***37,0***
60	58,5	61,0						35,0	50,0	35,0	57,0	37,0	56,0	37,0	56,0	37,0
65	***63,5***	***66,0***						***40,0***	***50,0***	***37,5***	***59,0***	***42,0***	***61,0***	***41,0***	***61,0***	***41,0***
70	68,5	71,0							50,0	37,5	59,0	42,0	61,0	41,0	61,0	41,0
75	***73,5***	***76,0***							***50,0***	***37,5***	***59,0***	***42,0***	***61,0***	***41,0***	***61,0***	***41,0***
80	78,5	81,0									59,0	47,0	61,0	46,0	61,0	46,0
90	***88,5***	***91,5***									***59,0***	***47,0***		***61,0***		***61,0***
100	98,5	101,5												61,0		61,0
110	***108,5***	***111,5***												***69,0****		***68,0****
120	118,5	121,5												69,0*		68,0*
130	***128,0***	***132,0***														***68,0****
140	138,0	142,0														68,0*
150	***148,0***	***152,0***														***68,0****
160	158,0	162,0														68,0*

Screws of Ø6,0 mm with partial thread additionally in lengths of 180 to 300 mm, in steps of 20 mm, LgT= 68,0 mm*

Intermediate lengths on Ls possible

Other thread lengths in the range ≥4xd1 to max. standard length permitted.

* Design C with lgT= max. 65,0 mm

Annex A20

SPAX®
Raised countersunk head

Self-tapping screw with full and partial thread

Material: cold rolled wire according to SPAX - Factory Standard
Screws of high carbon steel

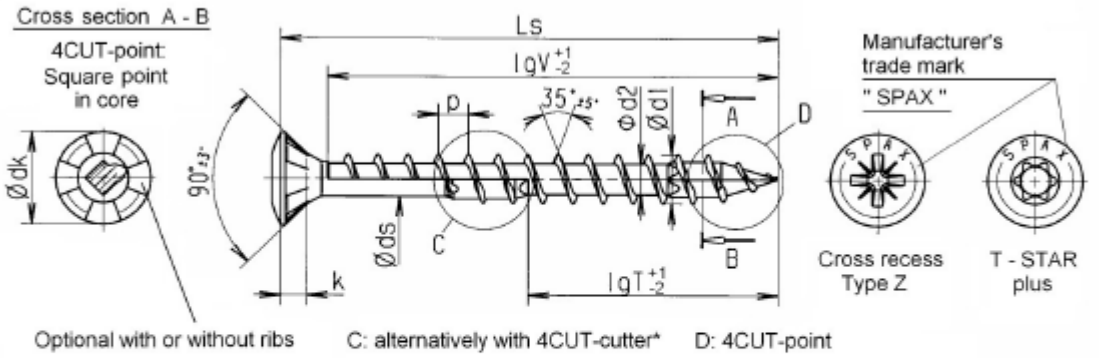

Nominal diamerer				3,5	4,0	4,5	5,0	6,0
d1	thread size			3,5	4,0	4,5	5,0	6,0
	permissible tolerance			±0,3				
dk	head diameter			7,0	8,0	8,8	9,7	11,6
	permissible tolerance			±0,5		±0,6		
d2	core diameter			2,25	2,6	2,9	3,2	3,9
	permissible tolerance			+0,1/-0,3	±0,3			
ds	shank diameter			2,45	2,85	3,2	3,55	4,3
	permissible tolerance			±0,10				
k	head height max.			2,1	2,4	2,7	2,9	3,4
p	thread pitch			2,1	2,4	2,7	3,0	3,6
	permissible tolerance			±0,1 x p				
T-STAR plus size				T15 / T20	T20			T30
Cross recess size Type Z				2				3

Ls			Standard thread lengths (full thread = lgV / partial thread = lgT)											
Nom.dim.	min	max	lgV	lgT	lgV	lgT	lgV	lgT	lgV	lgT	lgV	lgT	lgV	lgT
20	18,5	20,5	16,0		16,0									
25	***23,5***	***25,5***	***21,0***	***18,0***	***21,0***		***20,0***		***20,0***					
30	28,5	30,5	25,0	18,0	25,0	18,0	25,0		25,0		24,0			
35	***33,5***	***36,0***	***30,0***	***23,0***	***30,0***	***23,0***	***30,0***	***25,0***	***30,0***	***25,0***	***29,0***			
40	38,5	41,0	35,0	23,0	35,0	23,0	34,0	25,0	35,0	27,0	34,0	24,0		
45	***43,5***	***46,0***	***40,0***	***30,0***	***40,0***	***30,0***	***39,0***	***30,0***	***39,0***	***30,0***	***38,0***	***29,0***		
50	48,5	51,0	40,0	32,0	45,0	32,5	44,0	32,5	44,0	32,0	43,0	32,0		
55	***53,5***	***56,0***		***35,0***	***50,0***	***35,0***	***49,0***	***37,0***	***49,0***	***37,0***	***48,0***	***37,0***		
60	58,5	61,0		35,0	50,0	35,0	54,0	37,0	54,0	37,0	53,0	37,0		
65	***63,5***	***66,0***		***40,0***	***50,0***	***37,5***	***59,0***	***42,0***	***59,0***	***41,0***	***58,0***	***41,0***		
70	68,5	71,0			50,0	37,5	59,0	42,0	61,0	41,0	61,0	41,0		
75	***73,5***	***76,0***			***50,0***	***37,5***	***59,0***	***42,0***	***61,0***	***41,0***	***61,0***	***41,0***		
80	78,5	81,0			50,0	37,5	59,0	47,0	61,0	46,0	61,0	46,0		
90	***88,5***	***91,5***					***59,0***	***47,0***		***61,0***		***61,0***		
100	98,5	101,5								61,0		61,0		
110	***108,5***	***111,5***								***69,0****		***68,0****		
120	118,5	121,5								69,0*		68,0*		
130	***128,0***	***132,0***										***68,0****		
140	138,0	142,0										68,0*		
150	***148,0***	***152,0***										***68,0****		
160	158,0	162,0										68,0*		

Screws of Ø6,0 mm with partial thread additionally in lengths of 180 to 300 mm, in steps of 20 mm, LgT= 68,0 mm*

Intermediate lengths on Ls possible

Other thread lengths in the range ≥4xd1 to max. standard length permitted.

* Design C with lgT= max. 65,0 mm

Annex A21

SPAX®
Pan head

Self-tapping screw with full and partial thread

Material: cold rolled wire according to SPAX - Factory Standard
Screws of high carbon steel

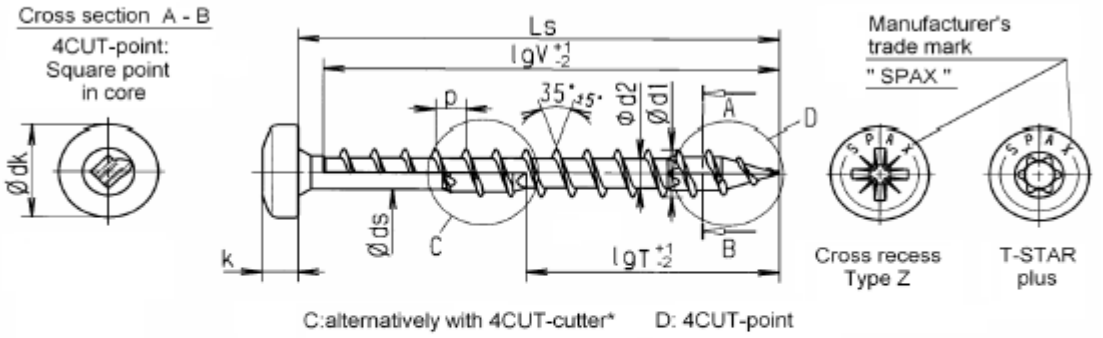

Nominal diameter				3,5	4,0	4,5	5,0	6,0
d1	thread size			3,5	4,0	4,5	5,0	6,0
	permissible tolerance			±0,3				
dk	head diameter			7,0	8,0	9,0	9,9	11,9
	permissible tolerance			±0,5		±0,6		
d2	core diameter			2,25	2,6	2,9	3,2	3,9
	permissible tolerance			+0,1/-0,3	±0,3			
ds	shank diameter			2,45	2,85	3,2	3,55	4,3
	permissible tolerance			±0,10				
k	head height max.			2,7	2,9	3,1	3,4	4,0
p	thread pitch			2,1	2,4	2,7	3,0	3,6
	permissible tolerance			±0,1 x p				
T-STAR plus size				T15 / T20	T20			T30
Cross recess size Z				2				3

Ls			Standard thread lengths (full thread = lgV / partial thread = lgT)													
Nom. dim.	min	max					lgV	lgT	lgV	lgT	lgV	lgT	lgV	lgT	lgV	lgT
16	***16,0***	***17,5***					***15,0***									
20	18,5	20,5					18,0		18,0							
25	***23,5***	***25,5***					***23,0***	***18,0***	***23,0***		***22,5***		***22,0***			
30	28,5	30,5					27,0	18,0	27,5	18,0	27,0		27,0		27,0	
35	***33,5***	***36,0***					***32,0***	***23,0***	***32,5***	***23,0***	***32,5***	***25,0***	***32,0***	***25,0***	***32,0***	***24,0***
40	38,5	41,0					37,0	23,0	37,5	23,0	37,0	25,0	37,0	27,0	37,0	24,0
45	***43,5***	***46,0***					***40,0***	***30,0***	***42,5***	***30,0***	***42,0***	***30,0***	***41,0***	***30,0***	***41,0***	***29,0***
50	48,5	51,0					40,0	32,0	47,5	32,5	47,0	32,5	46,0	32,0	46,0	32,0
55	***53,5***	***56,0***						***35,0***	***50,0***	***35,0***	***52,0***	***37,0***	***51,0***	***37,0***	***51,0***	***37,0***
60	58,5	61,0						35,0	50,0	35,0	57,0	37,0	56,0	37,0	56,0	37,0
65	***63,5***	***66,0***						***40,0***	***50,0***	***37,5***	***59,0***	***42,0***	***61,0***	***41,0***	***61,0***	***41,0***
70	68,5	71,0							50,0	37,5	59,0	42,0	61,0	41,0	61,0	41,0
75	***73,5***	***76,0***							***50,0***	***37,5***	***59,0***	***42,0***	***61,0***	***41,0***	***61,0***	***41,0***
80	78,5	81,0							50,0	37,5	59,0	47,0	61,0	46,0	61,0	46,0
90	***88,5***	***91,5***									***59,0***	***47,0***		***61,0***		***61,0***
100	98,5	101,5												61,0		61,0
110	***108,5***	***111,5***												***69,0****		***68,0****
120	118,5	121,5												69,0*		68,0*
130	***128,0***	***132,0***														***68,0****
140	138,0	142,0														68,0*
150	***148,0***	***152,0***														***68,0****
160	158,0	162,0														68,0*

Screws of Ø6,0 mm with partial thread additionally in lengths of 180 to 300 mm, in steps of 20 mm, LgT= 68,0 mm*

Intermediate lengths on Ls possible

Other thread lengths in the range ≥4xd1 to max. standard length permitted.

* Design C with lgT= max. 65,0 mm

Annex A22

SPAX®

Flat countersunk head

Self-tapping screw with full and partial thread

Material: cold rolled wire according to SPAX - Factory Standard
Stainless steel screws

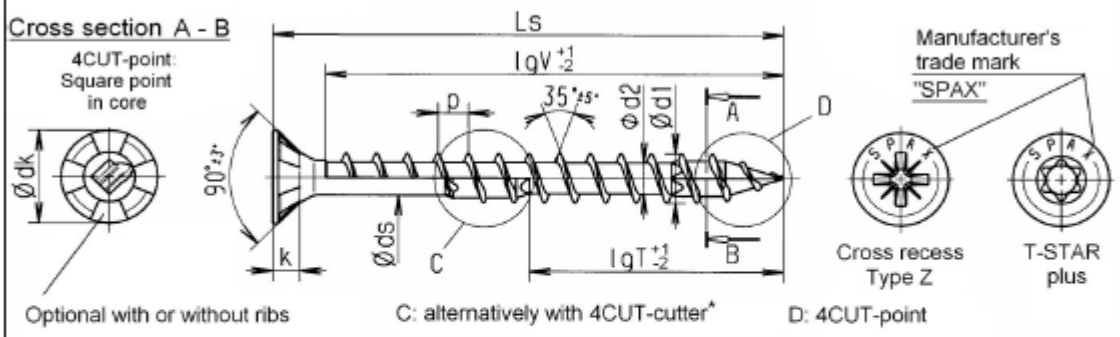

Nominal diameter						3,5	4,0	4,5	5,0	6,0
d1	thread Size					3,5	4,0	4,5	5,1	6,1
	permissible tolerance					±0,3				
dk	head diameter					7,0	8,0	8,8	9,7	11,6
	permissible tolerance					±0,5		±0,6		
d2	core diameter					2,5	2,8	3,1	3,4	3,9
	permissible tolerance					±0,3				
ds	shank diameter					2,6	3,0	3,3	3,75	4,3
	permissible tolerance					±0,10				
k	head height max.					2,1	2,4	2,7	2,9	3,4
p	thread pitch					2,1	2,4	2,7	3,0	3,6
	permissible tolerance					±0,1 x p				
T-STAR plus size						T15 / T20	T20			T30
Cross reecess size Type Z							2			3

Ls			Standard thread lengths (full thread = lgV / partial thread = lgT)													
Nom.dim.	min	max					lgV	lgT	lgV	lgT	lgV	lgT	lgV	lgT	lgV	lgT
20	18,5	20,5					16,0		16,0							
25	***23,5***	***25,5***					***21,0***	***18,0***	***21,0***		***20,0***		***20,0***			
30	28,5	30,5					25,0	18,0	25,0	18,0	25,0		25,0		24,0	
35	***33,5***	***36,0***					***30,0***	***23,0***	***30,0***	***23,0***	***30,0***	***25,0***	***30,0***	***25,0***	***29,0***	
40	38,5	41,0					35,0	23,0	35,0	23,0	34,0	25,0	35,0	27,0	34,0	24,0
45	***43,5***	***46,0***					***40,0***	***30,0***	***40,0***	***30,0***	***39,0***	***30,0***	***39,0***	***30,0***	***38,0***	***29,0***
50	48,5	51,0					40,0	32,0	45,0	32,5	44,0	32,5	44,0	32,0	43,0	32,0
55	***53,5***	***56,0***						***35,0***	***50,0***	***35,0***	***49,0***	***37,0***	***49,0***	***37,0***	***48,0***	***37,0***
60	58,5	61,0						35,0	50,0	35,0	54,0	37,0	54,0	37,0	53,0	37,0
65	***63,5***	***66,0***						***40,0***	***50,0***	***37,5***	***59,0***	***42,0***	***59,0***	***41,0***	***58,0***	***41,0***
70	68,5	71,0							50,0	37,5	59,0	42,0	61,0	41,0	61,0	41,0
75	***73,5***	***76,0***							***50,0***	***37,5***	***59***	***42,0***	***61,0***	***41,0***	***61,0***	***41,0***
80	78,5	81,0							50,0	37,5	59,0	47,0	61,0	46,0	61,0	46,0
90	***88,5***	***91,5***									***59,0***	***47,0***		***61,0***		***61,0***
100	98,5	101,5												61,0		61,0
110	***108,5***	***111,5***												***69,0****		***68,0****
120	118,5	121,5												69,0*		68,0*
130	***128,0***	***132,0***														***68,0****
140	138,0	142,0														68,0*
150	***148,0***	***152,0***														***68,0****
160	158,0	162,0														68,0*

Intermediate lengths on Ls possible

Other thread lengths in the range ≥4xd1 to max. standard length permitted.

* Design C with lgT= max. 65,0 mm

Annex A23

SPAX®
Washer head

Self-tapping screw with full and partial thread

Material: cold rolled wire according to SPAX - Factory Standard
Stainless steel screws

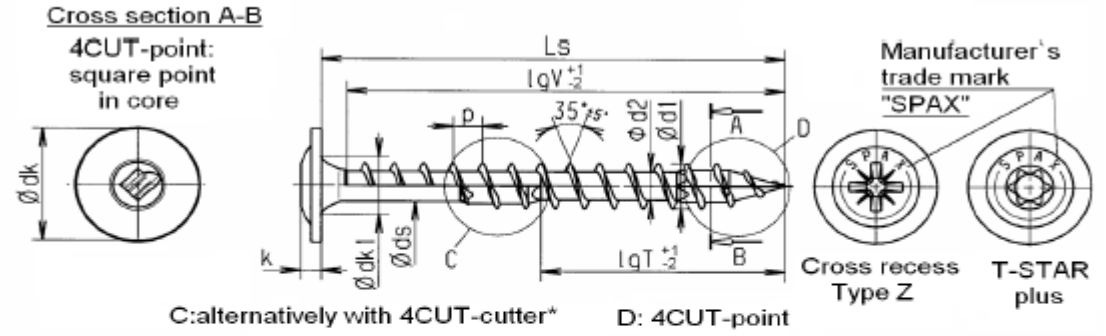

Nominal diameter																					
										3,5		4,0		4,5		5,0		6,0	
d1	thread size									3,5		4,0		4,5		5,1		6,1	
	permissible tolerance									±0,3									
dk	head diameter									8,6		9,6		10,6		11,6		13,6	
	permissible tolerance									±0,6								±0,65	
dk1	countersink diameter									4,9		5,0		5,4		5,9		6,9	
	permissible tolerance									+0,20									
d2	core diameter									2,5		2,8		3,1		3,4		3,9	
	permissible tolerance									±0,3									
ds	shank diameter									2,6		3,0		3,3		3,75		4,3	
	permissible tolerance									±0,10									
k	head height max.									1,8		1,9		2,0		2,2		3,1	
p	thread pitch									2,1		2,4		2,7		3,0		3,6	
	permissible tolerance									±0,1 x p									
T-STAR plus size										T15 / T20		T20						T30	
Cross recess size Type Z										2									
Ls			Standard thread lengths (full thread = lgV / partial thread = lgT)																
Nom.dim.	min	max								lgV	lgT	lgV	lgT	lgV	lgT	lgV	lgT	lgV	lgT
16	***16,0***	***17,5***								***15,0***									
20	18,5	20,5								18,0		18,0							
25	***23,5***	***25,5***								***23,0***	***18,0***	***23,0***		***22,5***		***22,0***			
30	28,5	30,5								27,0	18,0	27,5	18,0	27,5		27,0		27,0	
35	***33,5***	***36,0***								***32,0***	***23,0***	***32,5***	***23,0***	***32,5***	***25,0***	***32,0***	***25,0***	***32,0***	***24,0***
40	38,5	41,0								37,0	23,0	37,5	23,0	37,0	25,0	37,0	27,0	37,0	24,0
45	***43,5***	***46,0***								***40,0***	***30,0***	***42,5***	***30,0***	***42,0***	***30,0***	***41,0***	***30,0***	***41,0***	***29,0***
50	48,5	51,0								40,0	32,0	47,5	32,5	47,0	32,5	46,0	32,0	46,0	32,0
55	***53,5***	***56,0***									***35,0***	***50,0***	***35,0***	***52,0***	***37,0***	***51,0***	***37,0***	***51,0***	***37,0***
60	58,5	61,0									35,0	50,0	35,0	57,0	37,0	56,0	37,0	56,0	37,0
65	***63,5***	***66,0***									***40,0***	***50,0***	***37,5***	***59,0***	***42,0***	***61,0***	***41,0***	***61,0***	***41,0***
70	68,5	71,0										50,0	37,5	59,0	42,0	61,0	41,0	61,0	41,0
75	***73,5***	***76,0***										***50,0***	***37,5***	***59,0***	***42,0***	***61,0***	***41,0***	***61,0***	***41,0***
80	78,5	81,0												59,0	47,0	61,0	46,0	61,0	46,0
90	***88,5***	***91,5***												***59,0***	***47,0***		***61,0***		***61,0***
100	98,5	101,5															61,0		61,0
110	***108,5***	***111,5***															***69,0****		***68,0****
120	118,5	121,5															69,0*		68,0*
130	***128,0***	***132,0***																	***68,0****
140	138,0	142,0																	68,0*
150	***148,0***	***152,0***																	***68,0****
160	158,0	162,0																	68,0*

Intermediate lengths on Ls possible

Other thread lengths in the range ≥4xd1 to max. standard length permitted.

* Design C with lgT= max. 65,0 mm

Annex A24

SPAX®

Raised countersunk head

Self-tapping screw with full and partial thread

Material: cold rolled wire according to SPAX - Factory Standard

Stainless steel screws

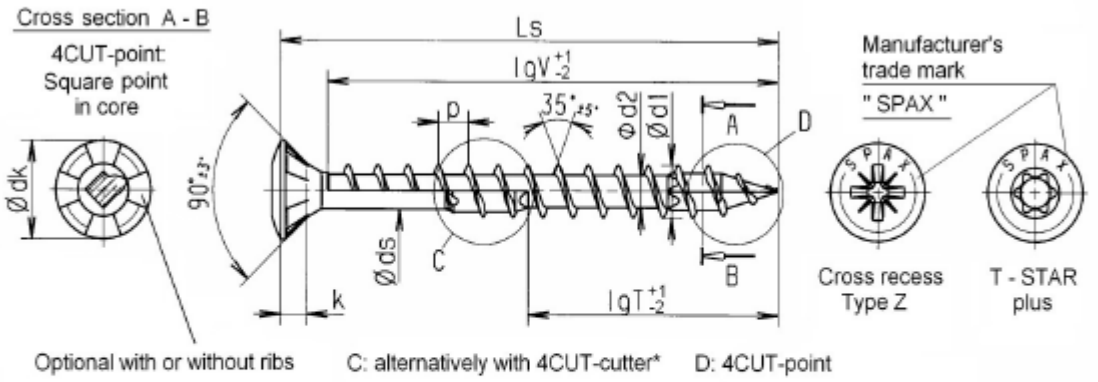

Nominal diamerer																			
d1	thread size																		
	permissible tolerance																		
dk	head diameter																		
	permissible tolerance																		
d2	core diameter																		
	permissible tolerance																		
ds	shank diameter																		
	permissible tolerance																		
k	head height max.																		
p	thread pitch																		
	permissible tolerance																		
T-STAR plus size																			
Cross recess size Type Z																			
Ls			Standard thread lengths (full thread = lgV / partial thread = lgT)																
Nom.dim.	min	max					lgV	lgT	lgV	lgT	lgV	lgT	lgV	lgT	lgV	lgT			
20	18,5	20,5					16,0		16,0										
25	***23,5***	***25,5***					***21,0***	***18,0***	***21,0***		***20,0***		***20,0***						
30	28,5	30,5					25,0	18,0	25,0	18,0	25,0		25,0		24,0				
35	***33,5***	***36,0***					***30,0***	***23,0***	***30,0***	***23,0***	***30,0***	***25,0***	***30,0***	***25,0***	***29,0***				
40	38,5	41,0					35,0	23,0	35,0	23,0	34,0	25,0	35,0	27,0	34,0	24,0			
45	***43,5***	***46,0***						***30,0***	***40,0***	***30,0***	***39,0***	***30,0***	***39,0***	***30,0***	***38,0***	***29,0***			
50	48,5	51,0						32,0	45,0	32,5	44,0	32,5	44,0	32,0	43,0	32,0			
55	***53,5***	***56,0***						***35,0***	***50,0***	***35,0***	***49,0***	***37,0***	***49,0***	***37,0***	***48,0***	***37,0***			
60	58,5	61,0						35,0	50,0	35,0	54,0	37,0	54,0	37,0	53,0	37,0			
65	***63,5***	***66,0***						***40,0***	***50,0***	***37,5***	***59,0***	***42,0***	***59,0***	***41,0***	***58,0***	***41,0***			
70	68,5	71,0							50,0	37,5	59,0	42,0	61,0	41,0	61,0	41,0			
75	***73,5***	***76,0***							***50,0***	***37,5***	***59,0***	***42,0***	***61,0***	***41,0***	***61,0***	***41,0***			
80	78,5	81,0							50,0	37,5	59,0	47,0	61,0	46,0	61,0	46,0			
90	***88,5***	***91,5***									***59,0***	***47,0***		***61,0***		***61,0***			
100	98,5	101,5												61,0		61,0			
110	***108,5***	***111,5***												***69,0****		***68,0****			
120	118,5	121,5												69,0*		68,0*			
130	***128,0***	***132,0***														***68,0****			
140	138,0	142,0														68,0*			
150	***148,0***	***152,0***														***68,0****			
160	158,0	162,0														68,0*			

3,5	**4,0**	**4,5**	**5,0**	**6,0**															
3,5	4,0	4,5	5,1	6,1															
±0,3																			
7,0	8,0	8,8	9,7	11,6															
±0,5		±0,6																	
2,5	2,8	3,1	3,4	3,9															
±0,3																			
2,6	3,0	3,3	3,75	4,3															
±0,10																			
2,1	2,4	2,7	2,9	3,4															
2,1	2,4	2,7	3,0	3,6															
±0,1 x p																			
T15 / T20	T20			T30															
2				3															

Intermediate lengths on Ls possible

Other thread lengths in the range ≥4xd1 to max. standard length permitted.

* Design C with lgT= max. 65,0 mm

Annex A25

SPAX®
Pan head

Self-tapping screw with full and partial thread

Material: cold rolled wire according to SPAX - Factory Standard
Stainless steel screws

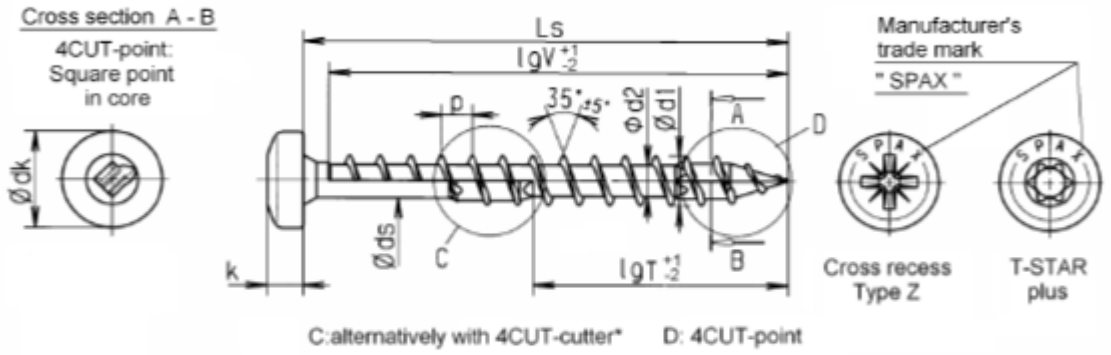

Nominal diameter				3,5	4,0	4,5	5,0	6,0
d1	thread size			3,5	4,0	4,5	5,1	6,1
	permissible tolerance			±0,3				
dk	head diameter			7,0	7,9	9,0	9,9	11,9
	permissible tolerance			±0,5		±0,6		
d2	core diameter			2,5	2,8	3,1	3,4	3,9
	permissible tolerance			±0,3				
ds	shank diameter			2,6	3,0	3,3	3,75	4,3
	permissible tolerance			±0,10				
k	head height max.			2,7	2,9	3,1	3,4	4,0
p	thread pitch			2,1	2,4	2,7	3,0	3,6
	permissible tolerance			±0,1 x p				
T-STAR plus size				T15 / T20	T20			T30
Cross recess size Z				2				3

Ls			Standard thread lengths (full thread = lgV / partial thread = lgT)													
Nom. dim.	min	max					lgV	lgT	lgV	lgT	lgV	lgT	lgV	lgT	lgV	lgT
16	***16,0***	***17,5***					***15,0***									
20	18,5	20,5					18,0		18,0							
25	***23,5***	***25,5***					***23,0***	***18,0***	***23,0***		***22,5***		***22,0***			
30	28,5	30,5					27,0	18,0	27,5	18,0	27,5		27,0		27,0	
35	***33,5***	***36,0***					***32,0***	***23,0***	***32,5***	***23,0***	***32,5***	***25,0***	***32,0***	***25,0***	***32,0***	
40	38,5	41,0					37,0	23,0	37,5	23,0	37,0	25,0	37,0	27,0	37,0	24,0
45	***43,5***	***46,0***					***40,0***	***30,0***	***42,5***	***30,0***	***42,0***	***30,0***	***41,0***	***30,0***	***41,0***	***29,0***
50	48,5	51,0					40,0	32,0	47,5	32,5	47,0	32,5	46,0	32,0	46,0	32,0
55	***53,5***	***56,0***						***35,0***	***50,0***	***35,0***	***52,0***	***37,0***	***51,0***	***37,0***	***51,0***	***37,0***
60	58,5	61,0						35,0	50,0	35,0	57,0	37,0	56,0	37,0	56,0	37,0
65	***63,5***	***66,0***						***40,0***	***50,0***	***37,5***	***59,0***	***42,0***	***61,0***	***41,0***	***61,0***	***41,0***
70	68,5	71,0							50,0	37,5	59,0	42,0	61,0	41,0	61,0	41,0
75	***73,5***	***76,0***							***50,0***	***37,5***	***59,0***	***42,0***	***61,0***	***41,0***	***61,0***	***41,0***
80	78,5	81,0							50,0	37,5	59,0	47,0	61,0	46,0	61,0	46,0
90	***88,5***	***91,5***									***59,0***	***47,0***		***61,0***		***61,0***
100	98,5	101,5												61,0		61,0
110	***108,5***	***111,5***												***69,0****		***68,0****
120	118,5	121,5												69,0*		68,0*
130	***128,0***	***132,0***														***68,0****
140	138,0	142,0														68,0*
150	***148,0***	***152,0***														***68,0****
160	158,0	162,0														68,0*

Intermediate lengths on Ls possible

Other thread lengths in the range ≥4xd1 to max. standard length permitted.

* Design C with lgT= max. 65,0 mm

Annex A26

SPAX®-S

Flat countersunk head

Self-tapping screw with full and partial thread

Material: cold rolled wire according to SPAX - Factory standard

Screws of high carbon steel

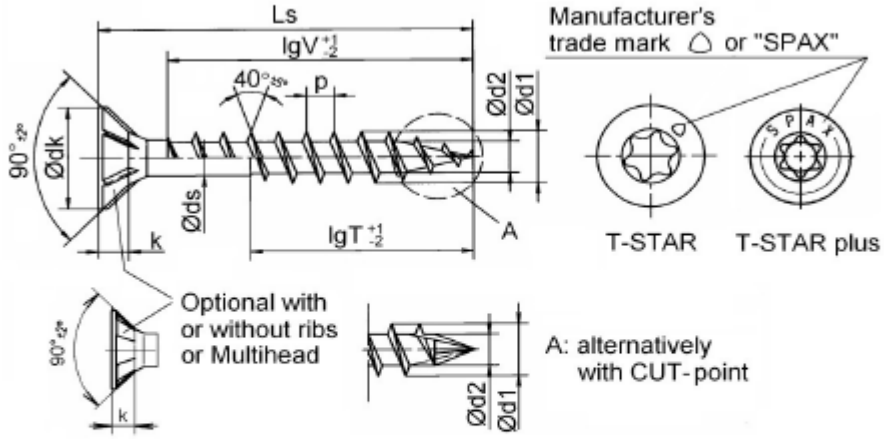

Nominal diameter		8,0	10,0	12,0
d1	thread size	8,1	10,0	12,0
	permissible tolerance	±0,4	±0,5	±0,6
dk	head diameter	15,1	18,6	22,6
	permissible tolerance	±0,75	±0,9	±1,1
d2	core diameter	5,0	6,1	7,35
	permissible tolerance	±0,3		±0,35
ds	shank diameter	5,7	6,8	8,5
	permissible tolerance	±0,25		
k	head height max.	4,4	6,0	6,6
p	thread pitch	4,0	5,0	6,0
	permissible tolerance	±0,1 x p		
T - STAR	size	T40	T50	T50

Ls			Standard thread lengths (full thread=lgV / partial thread = lgT)					
Nom.dim.	min	max	lgV	lgT	lgV	lgT	lgV	lgT
40	38,5	41,5	32,0					
45	***43,5***	***46,5***	***37,0***					
50	48,5	51,5	42,0	32,0	40,0			
55	***53,5***	***56,5***	***47,0***	***32,0***	***45,0***			
60	58,5	61,5	52,0	37,0	50,0		50,0	
65	***63,5***	***66,5***	***57,0***	***37,0***	***55,0***	***40,0***	***55,0***	
70	68,5	71,5	61,0	42,0	60,0	40,0	60,0	
75	***73,5***	***76,5***	***61,0***	***42,0***	***60,0***	***45,0***	***60,0***	
80	78,5	81,5	70,0	47,0	70,0	50,0	70,0	50,0
90	***88,5***	***91,5***	***80,0***	***52,0***	***80,0***	***55,0***	***80,0***	***55,0***
100	98,5	101,5	80,0	57,0	80,0	60,0	80,0	60,0
110	***108,5***	***111,5***	***80,0***	***70,0***	***80,0***	***70,0***		***80,0***
120	118,5	121,5	80,0	70,0	80,0	70,0		80,0
130	***128,0***	***132,0***	***80,0***	***70,0***	***80,0***	***70,0***		***80,0***
140	138,0	142,0		80,0		80,0		80,0
150	***148,0***	***152,0***		***80,0***		***80,0***		***100,0***
160	158,0	162,0		80,0		80,0		100,0
180	***178,0***	***182,0***		***80,0***		***80,0***		***100,0***
200	198,0	202,0		80,0		80,0		100,0
to								
600	***597,0***	***602,0***		***80,0***		***80,0***		***100,0***

Intermediate lengths on Ls possible

Other thread lengths in the range ≥4xd1 to max. standard length permitted

Annex A27

SPAX®-S
Washer head

Self-tapping screw with full and partial thread

Material: cold rolled wire according to SPAX - Factory standard
Screws of high carbon steel

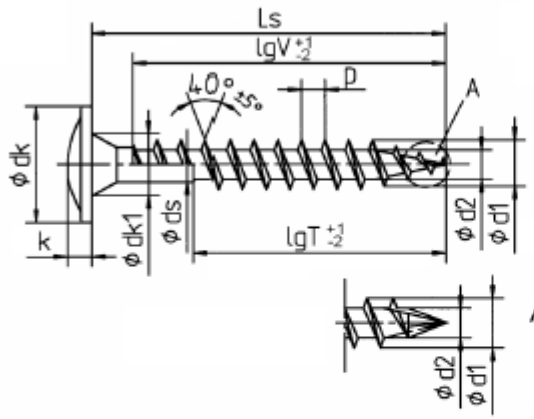

Manufacturer`s trade mark ⌂ or "SPAX"

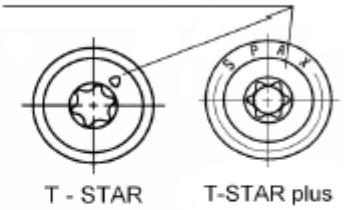

A: alternatively with CUT-point

Nominal diameter		8,0			10,0	12,0		
d1	thread size	8,1			10,0	12,0		
	permissible tolerance	±0,4			±0,5	±0,6		
dk	head diameter	18,0	20,0	22,0	25,0	29,0		
	permissible tolerance	±0,9	±1,0	±1,1	±1,25	±1,45		
dk1	countersink diameter	9,0			12,0	14,0		
	permissible tolerance	+0,30						
d2	core diameter	5,0			6,1	7,35		
	permissible tolerance	±0,3				±0,35		
ds	shamk diameter	5,7			6,8	8,5		
	permissible tolerance	±0,25						
k	head height max.	4,0			4,7	5,6		
p	thread pitch	4,0			5,0	6,0		
	permissible tolerance	±0,1 x p						
T - STAR	size	T40			T50			

Ls Nom.dim.	min	max	lgV	lgT	lgV	lgT	lgV	lgT				
			Standard thread lengths (full thread=lgV / partial thread = lgT)									
40	38,5	41,5	37,0									
45	***43,5***	***46,5***	***42,0***									
50	48,5	51,5	46,0	32,0								
55	***53,5***	***56,5***	***51,0***	***32,0***	***50,0***		***50,0***					
60	58,5	61,5	56,0	37,0	55,0		55,0					
65	***63,5***	***66,5***	***61,0***	***37,0***	***60,0***	***40,0***	***60,0***					
70	68,5	71,5	61,0	42,0	60,0	40,0	60,0					
75	***73,5***	***76,5***	***70,0***	***42,0***	***70,0***	***45,0***	***70,0***					
80	78,5	81,5	70,0	47,0	70,0	50,0	70,0	50,0				
90	***88,5***	***91,5***	***80,0***	***52,0***	***80,0***	***55,0***	***80,0***	***55,0***				
100	98,5	101,5	80,0	57,0	80,0	60,0	80,0	60,0				
110	***108,5***	***111,5***	***80,0***	***70,0***	***80,0***	***70,0***		***80,0***				
120	118,5	121,5	80,0	70,0	80,0	70,0		80,0				
130	***128,0***	***132,0***	***80,0***	***70,0***	***80,0***	***70,0***		***80,0***				
140	138,0	142,0		80,0		80,0		80,0				
150	***148,0***	***152,0***		***80,0***		***80,0***		***100,0***				
160	158,0	162,0		80,0		80,0		100,0				
180	***178,0***	***182,0***		***80,0***		***80,0***		***100,0***				
200	198,0	202,0		80,0		80,0		100,0				
to												
600	***597,0***	***602,0***		***80,0***		***80,0***		***100,0***				

Intermediate lengths on Ls possible

Other thread lengths in the range ≥4xd1 to max. standard length permitted

Annex A28

SPAX®-S

Raised countersunk head

Self-tapping screw with full and partial thread

Material: cold rolled wire according to SPAX - Factory standard

Screws of high carbon steel

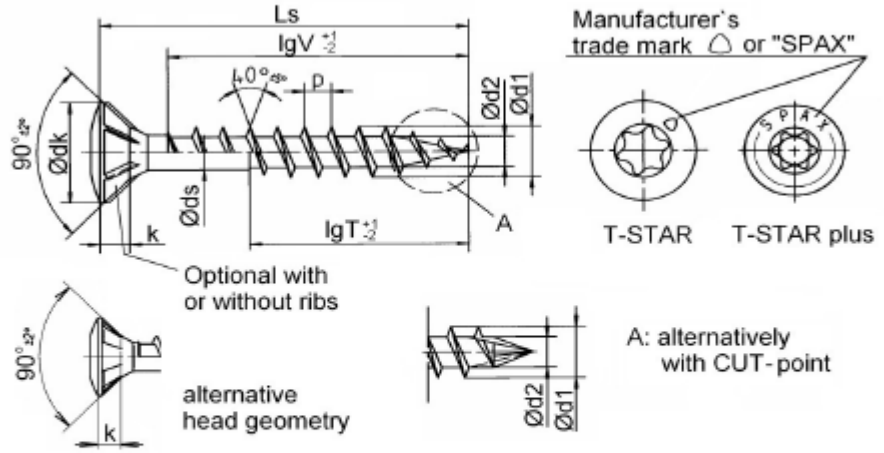

Nominal diameter		8,0	10,0	12,0
d1	thread size	8,1	10,0	12,0
	permissible tolerance	±0,4	±0,5	±0,6
dk	head diameter	15,1	18,6	22,6
	permissible tolerance	±0,75	±0,9	±1,1
d2	core diameter	5,0	6,1	7,35
	permissible tolerance	±0,3		±0,35
ds	shank diameter	5,7	6,8	8,5
	permissible tolerance	±0,25		
k	head height max.	4,4	6,0	6,6
p	thread pitch	4,0	5,0	6,0
	permissible tolerance	±0,1 x p		
T - STAR	size	T40	T50	T50

Ls			Standard thread lengths (full thread=lgV / partial thread = lgT)					
Nom.dim.	min	max	lgV	lgT	lgV	lgT	lgV	lgT
40	38,5	41,5	32,0					
45	***43,5***	***46,5***	***37,0***					
50	48,5	51,5	42,0	32,0	40,0			
55	***53,5***	***56,5***	***47,0***	***32,0***	***45,0***			
60	58,5	61,5	52,0	37,0	50,0		50,0	
65	***63,5***	***66,5***	***57,0***	***37,0***	***55,0***	***40,0***	***55,0***	
70	68,5	71,5	61,0	42,0	60,0	40,0	60,0	
75	***73,5***	***76,5***	***61,0***	***42,0***	***60,0***	***45,0***	***60,0***	
80	78,5	81,5	70,0	47,0	70,0	50,0	70,0	50,0
90	***88,5***	***91,5***	***80,0***	***52,0***	***80,0***	***55,0***	***80,0***	***55,0***
100	98,5	101,5	80,0	57,0	80,0	60,0	80,0	60,0
110	***108,5***	***111,5***	***80,0***	***70,0***	***80,0***	***70,0***		***80,0***
120	118,5	121,5	80,0	70,0	80,0	70,0		80,0
130	***128,0***	***132,0***	***80,0***	***70,0***	***80,0***	***70,0***		***80,0***
140	138,0	142,0		80,0		80,0		80,0
150	***148,0***	***152,0***		***80,0***		***80,0***		***100,0***
160	158,0	162,0		80,0		80,0		100,0
180	***178,0***	***182,0***		***80,0***		***80,0***		***100,0***
200	198,0	202,0		80,0		80,0		100,0
to								
600	***597,0***	***602,0***		***80,0***		***80,0***		***100,0***

Intermediate lengths on Ls possible

Other thread lengths in the range ≥4xd1 to max. standard length permitted

Annex A29

SPAX®-S

Pan head

Self-tapping screw with full and partial thread

Material: cold rolled wire according to SPAX - Factory standard

Screws of high carbon steel

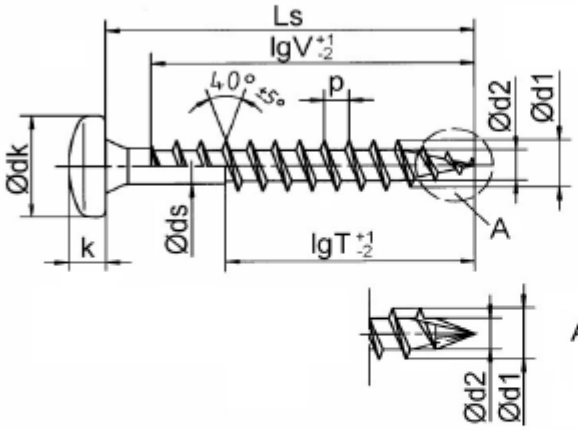

Manufacturer's trade mark ⌂ or "SPAX"

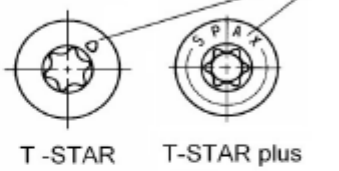

A: alternatively with CUT-point

Nominal diameter		8,0	10,0	12,0
d1	thread size	8,1	10,0	12,0
	permissible tolerance	±0,4	±0,5	±0,6
dk	head diameter	15,5	19,0	23,0
	permissible tolerance	±0,75	±0,95	±1,15
d2	core diameter	5,0	6,1	7,35
	permissible tolerance	±0,3		±0,35
ds	shank diameter	5,7	6,8	8,5
	permissible tolerance	±0,25		
k	head height max.	5,7	7,1	8,5
R	raised radius	16,0	20,0	24,0
p	thread pitch	4,0	5,0	6,0
	permissible tolerance	±0,1 x p		
T - STAR size		T40	T50	T50

Ls			Standard thread lengths (full thread=lgV / partial thread = lgT)					
Nom.dim.	min	max	lgV	lgT	lgV	lgT	lgV	lgT
40	38,0	41,5	37,0					
45	***43,0***	***46,5***	***42,0***					
50	48,5	51,5	46,0	32,0				
55	***53,5***	***56,5***	***51,0***	***32,0***	***50,0***		***50,0***	
60	58,5	61,5	56,0	37,0	55,0		55,0	
65	***63,5***	***66,5***	***61,0***	***37,0***	***60,0***	***40,0***	***60,0***	
70	68,5	71,5	61,0	42,0	60,0	40,0	60,0	
75	***73,5***	***76,5***	***70,0***	***42,0***	***70,0***	***45,0***	***70,0***	
80	78,5	81,5	70,0	47,0	70,0	50,0	70,0	50,0
90	***88,5***	***91,5***	***80,0***	***52,0***	***80,0***	***55,0***	***80,0***	***55,0***
100	98,5	101,5	80,0	57,0	80,0	60,0	80,0	60,0
110	***108,5***	***111,5***	***80,0***	***70,0***	***80,0***	***70,0***		***80,0***
120	118,5	121,5	80,0	70,0	80,0	70,0		80,0
130	***128,0***	***132,0***	***80,0***	***70,0***	***80,0***	***70,0***		***80,0***
140	138,0	142,0		80,0		80,0		80,0
150	***148,0***	***152,0***		***80,0***		***80,0***		***100,0***
160	158,0	162,0		80,0		80,0		100,0
180	***178,0***	***182,0***		***80,0***		***80,0***		***100,0***
200	198,0	202,0		80,0		80,0		100,0
to								
600	***597,0***	***602,0***		***80,0***		***80,0***		***100,0***

Intermediate lengths on Ls possible

Other thread lengths in the range ≥4xd1 to max. standard length permitted

Annex A30

SPAX®-S

Hex. head with/without flange

Self-tapping screw with full and partial thread

Material: cold rolled wire according to SPAX - Factory standard

Screws of high carbon steel

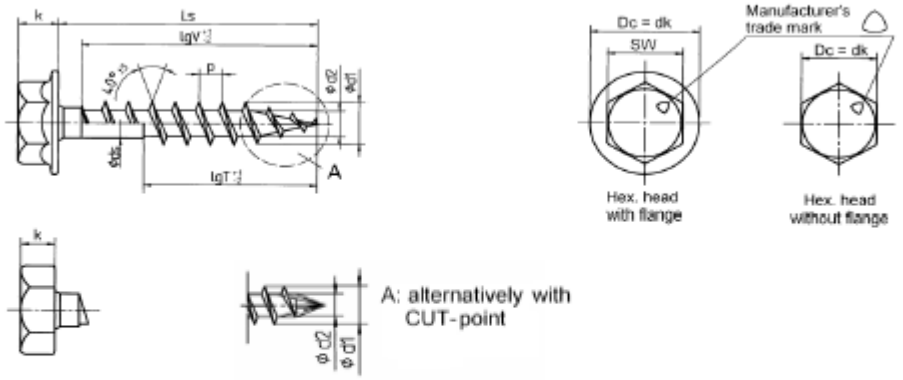

		with flange			without flange		
Nominal diameter		**8,0**	**10,0**	**12,0**	**8,0**	**10,0**	**12,0**
d1	thread size	8,1	10,0	12,0	8,1	10,0	12,0
	permissible tolerance	±0,4	±0,5	±0,6	±0,4	±0,5	±0,6
SW	wrench size	10	13	16	10	13	16
Dc	flange diamerer	17,0	20,8	24,7			
	permissible tolerance	±0,85	±1,0	±1,2			
d2	core diameter	5,0	6,1	7,3	5,0	6,1	7,35
	permissible tolerance			±0,3			±0,35
ds	shank diameter	5,7	6,8	8,5	5,7	6,8	8,5
	permissible tolerance		±0,25			±0,25	
k	head height max.	8,5	9,7	12,1	6,0	7,0	8,0
p	thread pitch	4,0	5,0	6,0	4,0	5,0	6,0
	permissible tolerance		±0,1 x p			±0,1 x p	

Ls			Standard thread lengths (full thread=lgV / partial thread = lgT)											
Nom.dim.	min	max	lgV	lgT	lgV	lgT	lgV	lgT	lgV	lgT	lgV	lgT	lgV	lgT
40	38,5	41,5	37,0						37,0					
45	***43,5***	***46,5***	***42,0***						***42,0***					
50	48,5	51,5	46,0	32,0	45,0				46,0	32,0	45,0			
55	***53,5***	***56,5***	***51,0***	***32,0***	***50,0***		***50,0***		***51,0***	***32,0***	***50,0***		***50,0***	
60	58,5	61,5	56,0	37,0	55,0		55,0		56,0	37,0	55,0		55,0	
65	***63,5***	***66,5***	***61,0***	***37,0***	***60,0***	***40,0***	***60,0***		***61,0***	***37,0***	***60,0***	***40,0***	***60,0***	
70	68,5	71,5	61,0	42,0	60,0	40,0	60,0		61,0	42,0	60,0	40,0	60,0	
75	***73,5***	***76,5***	***70,0***	***42,0***	***70,0***	***45,0***	***70,0***		***70,0***	***42,0***	***70,0***	***45,0***	***70,0***	
80	78,5	81,5	70,0	47,0	70,0	50,0	70,0	50,0	70,0	47,0	70,0	50,0	70,0	50,0
90	***88,5***	***91,5***	***80,0***	***52,0***	***80,0***	***55,0***	***80,0***	***55,0***	***80,0***	***52,0***	***80,0***	***55,0***	***80,0***	***55,0***
100	98,5	101,5	80,0	57,0	80,0	60,0	80,0	60,0	80,0	57,0	80,0	60,0	80,0	60,0
110	***108,5***	***111,5***	***80,0***	***70,0***	***80,0***	***70,0***		***80,0***	***80,0***	***70,0***	***80,0***	***70,0***		***80,0***
120	118,5	121,5	80,0	70,0	80,0	70,0		80,0	80,0	70,0	80,0	70,0		80,0
130	***128,0***	***132,0***	***80,0***	***70,0***	***80,0***	***70,0***		***80,0***	***80,0***	***70,0***	***80,0***	***70,0***		***80,0***
140	138,0	142,0		80,0		80,0		80,0		80,0		80,0		80,0
150	***148,0***	***152,0***		***80,0***		***80,0***		***100,0***		***80,0***		***80,0***		***100,0***
160	158,0	162,0		80,0		80,0		100,0		80,0		80,0		100,0
180	***178,0***	***182,0***		***80,0***		***80,0***		***100,0***		***80,0***		***80,0***		***100,0***
200	198,0	202,0		80,0		80,0		100,0		80,0		80,0		100,0
to														
600	***597,0***	***602,0***		***80,0***		***80,0***		***100,0***		***80,0***		***80,0***		***100,0***

Intermediate lengths on Ls possible

Other thread lengths in the range ≥4xd1 to max. standard length permitted

Annex A31

SPAX®

Flat countersunk head

Self-tapping screw with full and partial thread

Material: cold rolled wire according to SPAX - Factory standard

Screws of high carbon steel

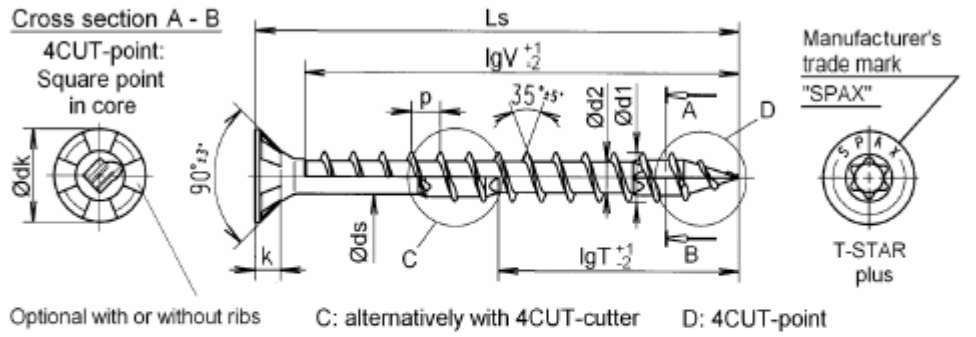

Optional with or without ribs C: alternatively with 4CUT-cutter D: 4CUT-point

Nominal diameter		8,0	10,0
d1	thread size	8,1	10,0
	permissible tolerance	±0,4	±0,5
dk	head diameter	15,1	18,6
	permissible tolerance	±0,75	±0,9
d2	core diameter	5,0	6,1
	permissible tolerance	±0,3	
ds	shank diameter	5,7	6,8
	permissible tolerance	±0,25	±0,25
k	head height max.	4,4	6,0
p	thread pitch	4,8	6,0
	permissible	±0,1 x p	±0,1 x p
T-STAR plus size		T40	T50

Ls			Standard thread lengths (full thread=lgV / partial thread = lgT)			
Nom.dim.	min	max	lgV	lgT	lgV	lgT
40	38,5	41,5	32,0			
45	***43,5***	***46,5***	***37,0***			
50	48,5	51,5	42,0	32,0	40,0	
55	***53,5***	***56,5***	***47,0***	***32,0***	***45,0***	
60	58,5	61,5	52,0	37,0	50,0	
65	***63,5***	***66,5***	***57,0***	***37,0***	***55,0***	
70	68,5	71,5	61,0	42,0	60,0	
75	***73,5***	***76,5***	***61,0***	***42,0***	***60,0***	
80	78,5	81,5	70,0	47,0	70,0	50,0
90	***88,5***	***91,5***	***80,0***	***52,0***	***80,0***	***55,0***
100	98,5	101,5	80,0	57,0	80,0	60,0
110	***108,5***	***111,5***	***80,0***	***70,0***	***80,0***	***80,0***
120	118,5	121,5	80,0	70,0	80,0	80,0
130	***128,0***	***132,0***	***80,0***	***70,0***	***80,0***	***80,0***
140	138,0	142,0		80,0		80,0
150	***148,0***	***152,0***		***80,0***		***80,0***
160	158,0	162,0		80,0		80,0
180	***178,0***	***182,0***		***80,0***		***80,0***
200	198,0	202,0		80,0		80,0
to						
600	***597,0***	***602,0***		***80,0***		***80,0***

Intermediate lengths on Ls possible

Other thread lengths in the range ≥4xd1 to max. standard length permitted

Annex A32

	SPAX® Washer head	Self-tapping screw with full and partial thread Material: cold rolled wire according to SPAX - Factory standard Screws of high carbon steel

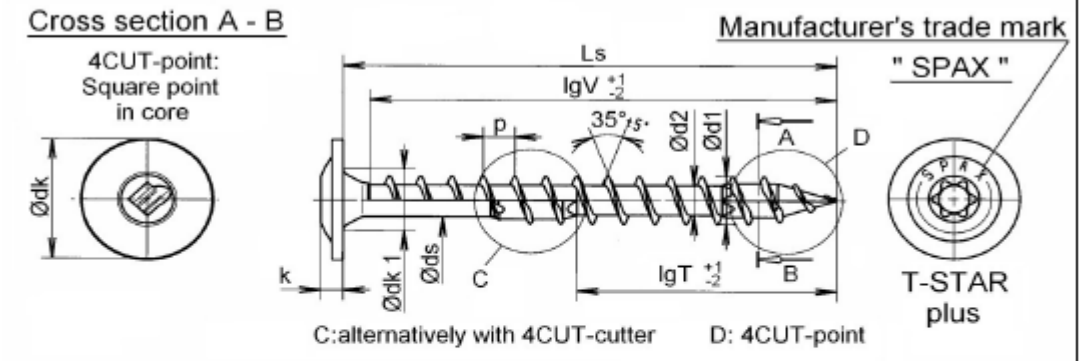

Nominal diameter		**8,0**				**10,0**		
d1	thread size	8,1				10,0		
	permissible tolerance	±0,4				±0,5		
dk	head diameter	18,0	20,0	22,0	24,0	23,0	25,0	27,0
	permissible tolerance	±0,9	±1,0	±1,1	±1,2	±1,15	±1,25	±1,35
dk1	countersink diameter	9,00				12,00		
	permissible tolerance	+0,50				+0,5		
d2	core diameter	5,0				6,1		
	permissible tolerance	±0,3						
ds	shank diameter	5,7				6,8		
	permissible tolerance	±0,25				±0,25		
k	head height max.	4,3				4,7		
p	thread pitch	4,8				6,0		
	permissible tolerance	±0,1 x p				±0,1 x p		
T-STAR plus size		T40				T50		

Ls			Standard thread lengths (full thread=lgV / partial thread = lgT)			
Nom.dim.	min	max	lgV	lgT	lgV	lgT
40	38,5	41,5	37,0			
45	***43,5***	***46,5***	***42,0***			
50	48,5	51,5	46,0	32,0	45,0	
55	***53,5***	***56,5***	***51,0***	***32,0***	***50,0***	
60	58,5	61,5	56,0	37,0	55,0	
65	***63,5***	***66,5***	***61,0***	***37,0***	***60,0***	
70	68,5	71,5	61,0	42,0	60,0	
75	***73,5***	***76,5***	***70,0***	***42,0***	***70,0***	
80	78,5	81,5	70,0	47,0	70,0	50,0
90	***88,5***	***91,5***	***80,0***	***52,0***	***80,0***	***55,0***
100	98,5	101,5	80,0	57,0	80,0	60,0
110	***108,5***	***111,5***	***80,0***	***70,0***	***80,0***	***80,0***
120	118,5	121,5	80,0	70,0	80,0	80,0
130	***128,0***	***132,0***	***80,0***	***70,0***	***80,0***	***80,0***
140	138,0	142,0		80,0		80,0
150	***148,0***	***152,0***		***80,0***		***80,0***
160	158,0	162,0		80,0		80,0
180	***178,0***	***182,0***		***80,0***		***80,0***
200	198,0	202,0		80,0		80,0
to						
600*	***597,0***	***602,0***		***80,0***		***80,0***

Intermediate lengths on Ls possible
[ ] = Preferred size

*for d1=10,0 Ls up to 1.000 mm possible

Other thread lengths in the range ≥4xd1 to max. standard length permitted

Annex A33

SPAX®

Raised coutersunk head

Self-tapping screw with full and partial thread

Material: cold rolled wire according to SPAX - Factory standard

Screws of high carbon steel

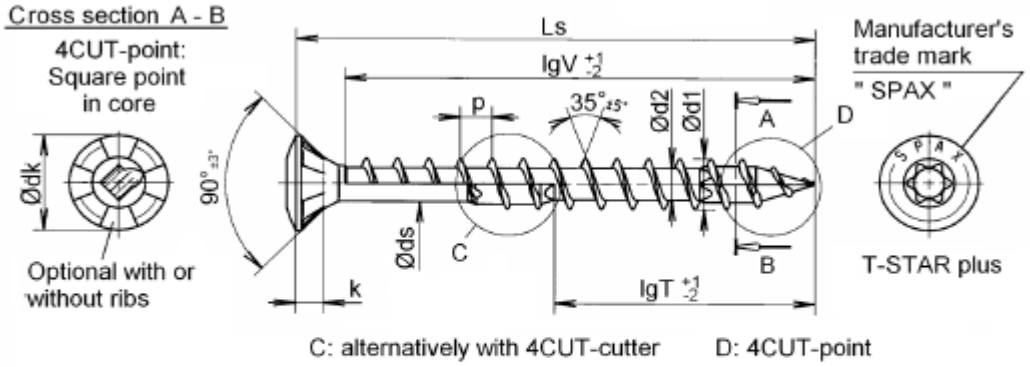

Nominal diameter		8,0	10,0
d1	thread size	8,1	10,0
	permissible tolerance	±0,4	±0,5
dk	head diameter	15,1	18,6
	permissible tolerance	±0,75	±0,9
d2	core diameter	5,0	6,1
	permissible tolerance	±0,3	
ds	shank diameter	5,7	6,8
	permissible tolerance	±0,25	±0,25
k	head height max.	4,4	6,0
p	thread pitch	4,8	6,0
	permissible tolerance	±0,1 x p	±0,1 x p
T-STAR plus size		T40	T50

Ls			Standard thread lengths (full thread=lgV / partial thread = lgT)			
Nom.dim.	min	max	lgV	lgT	lgV	lgT
40	38,5	41,5	32,0			
45	***43,5***	***46,5***	***37,0***			
50	48,5	51,5	42,0	32,0	40,0	
55	***53,5***	***56,5***	***47,0***	***32,0***	***45,0***	
60	58,5	61,5	52,0	37,0	50,0	
65	***63,5***	***66,5***	***57,0***	***37,0***	***55,0***	
70	68,5	71,5	61,0	42,0	60,0	
75	***73,5***	***76,5***	***61,0***	***42,0***	***60,0***	
80	78,5	81,5	70,0	47,0	70,0	50,0
90	***88,5***	***91,5***	***80,0***	***52,0***	***80,0***	***55,0***
100	98,5	101,5	80,0	57,0	80,0	60,0
110	***108,5***	***111,5***	***80,0***	***70,0***	***80,0***	***80,0***
120	118,5	121,5	80,0	70,0	80,0	80,0
130	***128,0***	***132,0***	***80,0***	***70,0***	***80,0***	***80,0***
140	138,0	142,0		80,0		80,0
150	***148,0***	***152,0***		***80,0***		***80,0***
160	158,0	162,0		80,0		80,0
180	***178,0***	***182,0***		***80,0***		***80,0***
200	198,0	202,0		80,0		80,0
to						
600	***597,0***	***602,0***		***80,0***		***80,0***

Intermediate lengths on Ls possible

Other thread lengths in the range ≥4xd1 to max. standard length permitted

Annex A34

SPAX®

Pan head

Self-tapping screw with full and partial thread

Material: cold rolled wire according to SPAX - Factory standard

Screws of high carbon steel

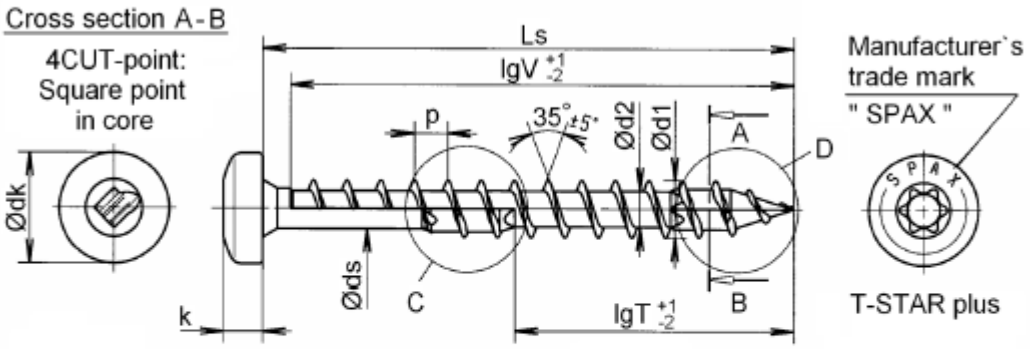

C: alternatively with 4CUT-cutter D: 4CUT-point

Nominal diameter		8,0	10,0
d1	thread size	8,1	10,0
	permissible tolerance	±0,4	±0,5
dk	head diameter	15,5	19,0
	permissible tolerance	±0,75	±0,95
d2	core diameter	5,0	6,1
	permissible tolerance	±0,30	
ds	shank diameter	5,7	6,8
	permissible tolerance	±0,25	±0,25
k	head height max.	6,0	7,1
p	thread pitch	4,8	6,0
	permissible tolerance	±0,1 x p	±0,1 x p
T-STAR plus size		T40	T50

Ls			Standard thread lengths (full thread=lgV / partial thread = lgT)			
Nom.dim.	min	max	lgV	lgT	lgV	lgT
40,0	38,5	41,5	37,0			
45,0	***43,5***	***56,5***	***42,0***			
50	48,5	51,5	46,0	32,0	40,0	
55	***53,5***	***56,5***	***51,0***	***32,0***	***45,0***	
60	58,5	61,5	56,0	37,0	50,0	
65	***63,5***	***66,5***	***61,0***	***37,0***	***55,0***	
70	68,5	71,5	61,0	42,0	60,0	
75	***73,5***	***76,5***	***70,0***	***42,0***	***60,0***	
80	78,5	81,5	70,0	47,0	70,0	50,0
90	***88,5***	***91,5***	***80,0***	***52,0***	***80,0***	***55,0***
100	98,5	101,5	80,0	57,0	80,0	60,0
110	***108,5***	***111,5***	***80,0***	***70,0***	***80,0***	***80,0***
120	118,5	121,5	80,0	70,0	80,0	80,0
130	***128,0***	***132,0***	***80,0***	***70,0***	***80,0***	***80,0***
140	138,0	142,0		80,0		80,0
150	***148,0***	***152,0***		***80,0***		***80,0***
160	158,0	162,0		80,0		80,0
180	***178,0***	***182,0***		***80,0***		***80,0***
200	198,0	202,0		80,0		80,0
to						
600	***597,0***	***602,0***		***80,0***		***80,0***

Intermediate lengths on Ls possible

Other thread lengths in the range ≥4xd1 to max. standard length permitted

Annex A35

SPAX®

Hex. Head with/without flange

Self-tapping screw with full and partial thread

Material: cold rolled wire according to SPAX - Factory standard

Screws of high carbon steel

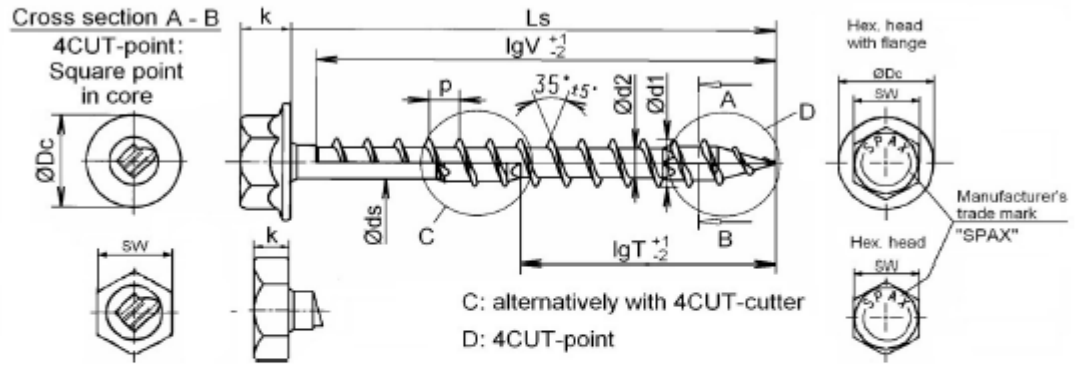

		with flange		without flange		with flange		without flange
Nominal diameter		**8,0**		**8,0**		**10,0**		**10,0**
d1	thread size	8,1		8,1		10,0		10,0
	permissible tolerance	±0,4		±0,4		±0,5		±0,5
SW	wrench size	10		10		13		13
Dc	flange diameter	16,5		-		20,8		-
	permissible tolerance	±0,8		-		±1,0		-
d2	core diameter	5,0		5,0		6,1		6,1
	permissible tolerance	±0,3		±0,3		±0,3		±0,3
ds	shank diameter	5,7		5,7		6,8		6,8
	permissible tolerance	±0,25		±0,25		±0,25		±0,25
k	head height max.	4,4		4,4		9,7		7,0
p	thread pitch	4,8		4,8		6,0		6,0
	permissible tolerance	±0,1 x p		±0,1 x p		±0,1 x p		±0,1 x p

Ls Nom.dim.	min	max	Standard thread lengths (full thread=lgV / partial thread = lgT) lgV	lgT												
40	38,5	41,5	32,0				32,0									
45	***43,5***	***46,5***	***37,0***				***37,0***									
50	48,5	51,5	42,0	32,0			42,0	32,0			40,0				40,0	
55	***53,5***	***56,5***	***47,0***	***32,0***			***47,0***	***32,0***			***45,0***				***45,0***	
60	58,5	61,5	52,0	37,0			52,0	37,0			50,0				50,0	
65	***63,5***	***66,5***	***57,0***	***37,0***			***57,0***	***37,0***			***55,0***				***55,0***	
70	68,5	71,5	61,0	42,0			61,0	42,0			60,0				60,0	
75	***73,5***	***76,5***	***61,0***	***42,0***			***61,0***	***42,0***			***60,0***				***60,0***	
80	78,5	81,5	70,0	47,0			70,0	47,0			70,0	50,0			70,0	50,0
90	***88,5***	***91,5***	***80,0***	***52,0***			***80,0***	***52,0***			***80,0***	***55,0***			***80,0***	***55,0***
100	98,5	101,5	80,0	57,0			80,0	57,0			80,0	60,0			80,0	60,0
110	***108,5***	***111,5***	***80,0***	***70,0***			***80,0***	***70,0***			***80,0***	***80,0***			***80,0***	***80,0***
120	118,5	121,5	80,0	70,0			80,0	70,0			80,0	80,0			80,0	80,0
130	***128,0***	***132,0***	***80,0***	***70,0***			***80,0***	***70,0***			***80,0***	***80,0***			***80,0***	***80,0***
140	138,0	142,0		80,0				80,0				80,0				80,0
150	***148,0***	***152,0***		***80,0***				***80,0***				***80,0***				***80,0***
160	158,0	162,0		80,0				80,0				80,0				80,0
180	***178,0***	***182,0***		***80,0***				***80,0***				***80,0***				***80,0***
200	198,0	202,0		80,0				80,0				80,0				80,0
to																
600	***597,0***	***602,0***		***80,0***				***80,0***				***80,0***				***80,0***

Intermediate lengths on Ls possible

Other thread lengths in the range ≥4xd1 to max. standard length permitted

Annex A36

SPAX®

Flat countersunk head

Self-tapping screw with full and partial thread

Material: cold rolled wire according to SPAX - Factory standard

Stainless steel screws

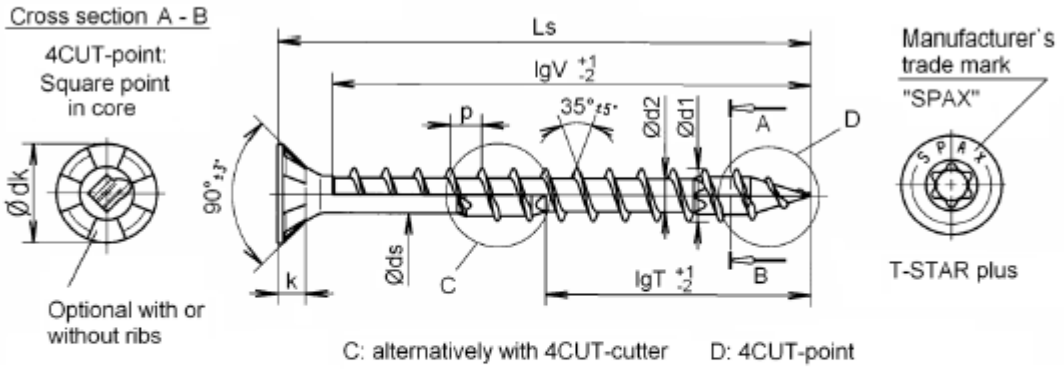

Nominal diameter		8,0	10,0
d1	thread size	8,1	10,0
	permissible tolerance	±0,4	±0,5
dk	head diameter	15,1	18,6
	permissible tolerance	±0,75	±0,93
d2	core diameter	5,3	6,1
	permissible tolerance	±0,30	
ds	shank diameter	5,70	6,80
	permissible tolerance	±0,25	
k	head height max.	4,4	6,0
p	thread pitch	4,8	6,0
	permissible tolerance	±0,1 x p	
T-STAR plus size		T40	T50

Ls			Standard thread lengths (full thread=lgV / partial thread = lgT)			
Nom.dim.	min	max	lgV	lgT	lgV	lgT
40	38,5	41,5	32,0			
45	***43,5***	***46,5***	***37,0***			
50	48,5	51,5	42,0	32,0	40,0	
55	***53,5***	***56,5***	***47,0***	***32,0***	***45,0***	
60	58,5	61,5	52,0	37,0	50,0	
65	***63,5***	***66,5***	***57,0***	***37,0***	***55,0***	
70	68,5	71,5	61,0	42,0	60,0	
75	***73,5***	***76,5***	***61,0***	***42,0***	***60,0***	
80	78,5	81,5	70,0	47,0	70,0	50,0
90	***88,5***	***91,5***	***80,0***	***52,0***	***80,0***	***55,0***
100	98,5	101,5	80,0	57,0	80,0	60,0
110	***108,5***	***111,5***	***80,0***	***70,0***	***80,0***	***80,0***
120	118,5	121,5	80,0	70,0	80,0	80,0
130	***128,0***	***132,0***	***80,0***	***70,0***	***80,0***	***80,0***
140	138,0	142,0		80,0		80,0
150	***148,0***	***152,0***		***80,0***		***80,0***
160	158,0	162,0		80,0		80,0
180	***178,0***	***182,0***		***80,0***		***80,0***
200	197,0	202,0		80,0		80,0
to						
600	***597,0***	***602,0***		***80,0***		***80,0***

Intermediate lengths on Ls possible

Other thread lengths in the range ≥4xd1 to max. standard length permitted

Annex A37

SPAX®
Washer head

Self-tapping screw with full and partial thread

Material: cold rolled wire according to SPAX - Factory standard
Stainless steel screws

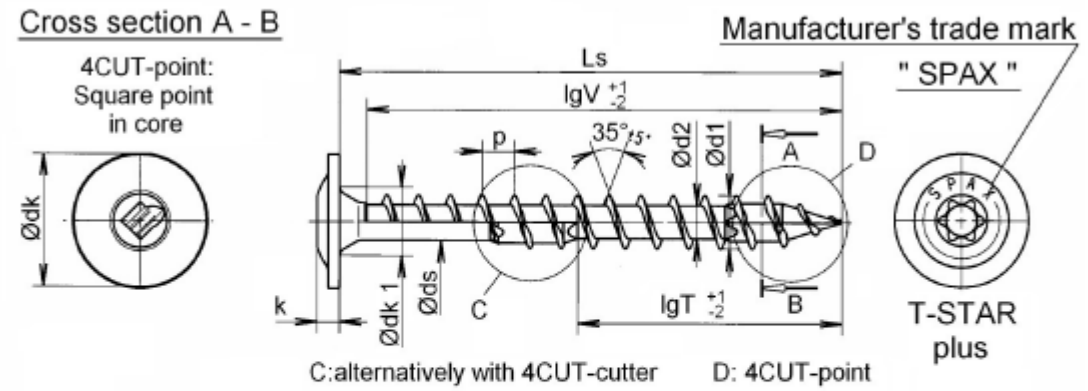

Nominal diameter		8,0				10,0		
d1	thread size	8,1				10,0		
	permissible tolerance	±0,4				±0,5		
dk	head diameter	18,0	20,0	22,0	24,0	23,0	25,0	27,0
	permissible tolerance	±0,9	±1,0	±1,1	±1,2	±1,15	±1,25	±1,35
dk1	countersink diameter	9,00				12,00		
	permissible tolerance	+0,50				+0,5		
d2	core diameter	5,3				6,1		
	permissible tolerance	±0,3				±0,3		
ds	shank diameter	5,70				6,80		
	permissible tolerance	±0,25				±0,25		
k	head height max.	4,3				4,7		
p	thread pitch	4,8				6,0		
	permissible tolerance	±0,1 x p				±0,1 x p		
T-STAR plus size		T40				T50		

Ls			Standard thread lengths (full thread=lgV / partial thread = lgT)			
Nom.dim.	min	max	lgV	lgT	lgV	lgT
40	37,5	41,5	37,0			
45	***43,5***	***46,5***	***42,0***			
50	48,5	51,5	46,0	32,0	40,0	
55	***53,5***	***56,5***	***51,0***	***32,0***	***45,0***	
60	58,5	61,5	56,0	37,0	50,0	
65	***63,5***	***66,5***	***61,0***	***37,0***	***55,0***	
70	68,5	71,5	61,0	42,0	60,0	
75	***73,5***	***76,5***	***70,0***	***42,0***	***70,0***	
80	78,5	81,5	70,0	47,0	70,0	50,0
90	***88,5***	***91,5***	***80,0***	***52,0***	***80,0***	***55,0***
100	98,5	101,5	80,0	57,0	80,0	60,0
110	***108,5***	***111,5***	***80,0***	***70,0***	***80,0***	***80,0***
120	118,5	121,5	80,0	70,0	80,0	80,0
130	***128,0***	***132,0***	***80,0***	***70,0***	***80,0***	***80,0***
140	138,0	142,0		80,0		80,0
150	***148,0***	***152,0***		***80,0***		***80,0***
160	158,0	162,0		80,0		80,0
180	***178,0***	***182,0***		***80,0***		***80,0***
200	197,0	202,0		80,0		80,0
to						
600	***597,0***	***602,0***		***80,0***		***80,0***

Intermediate lengths on Ls possible
▭ = Preferred size

Other thread lengths in the range ≥4xd1
to max. standard length permitted

Annex A38

SPAX®

Raised coutersunk head

Self-tapping screw with full and partial thread

Material: cold rolled wire according to SPAX - Factory standard

Stainless steel screws

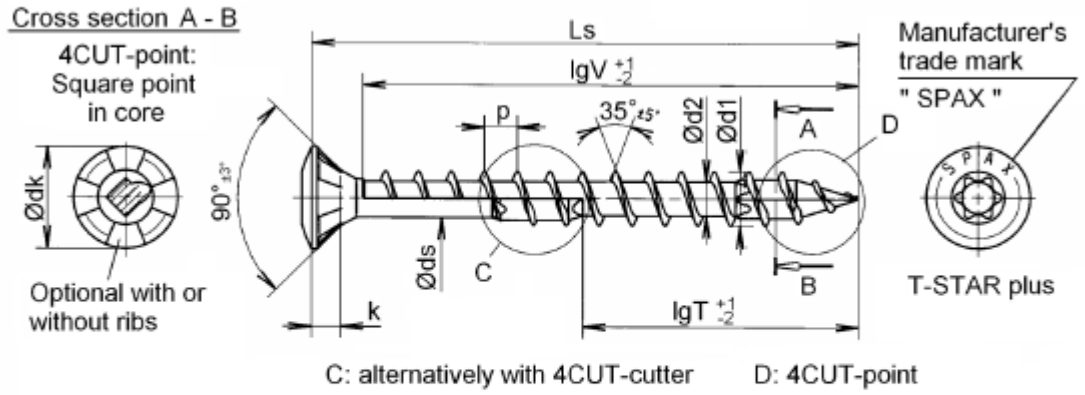

Nominal diameter		8,0	10,0
d1	thread size	8,1	10,0
	permissible tolerance	±0,4	±0,5
dk	head diameter	15,1	18,6
	permissible tolerance	±0,75	±0,93
d2	core diameter	5,3	6,1
	permissible tolerance	±0,3	±0,3
ds	shank diameter	5,70	6,80
	permissible tolerance	±0,25	±0,25
k	head height max.	4,4	6,0
p	thread pitch	4,8	6,0
	permissible tolerance	±0,1 x p	±0,1 x p
T-STAR plus size		T40	T50

Ls			Standard thread lengths (full thread=lgV / partial thread = lgT)			
Nom.dim.	min	max	lgV	lgT	lgV	lgT
40	38,5	41,5	32,0			
45	***43,5***	***46,5***	***37,0***			
50	48,5	51,5	42,0	32,0	40,0	
55	***53,5***	***56,5***	***47,0***	***32,0***	***45,0***	
60	58,5	61,5	52,0	37,0	50,0	
65	***63,5***	***66,5***	***57,0***	***37,0***	***55,0***	
70	68,5	71,5	61,0	42,0	60,0	
75	***73,5***	***76,5***	***61,0***	***42,0***	***60,0***	
80	78,5	81,5	70,0	47,0	70,0	50,0
90	***88,5***	***91,5***	***80,0***	***52,0***	***80,0***	***55,0***
100	98,5	101,5	80,0	57,0	80,0	60,0
110	***108,5***	***111,5***	***80,0***	***70,0***	***80,0***	***80,0***
120	118,5	121,5	80,0	70,0	80,0	80,0
130	***128,0***	***132,0***	***80,0***	***70,0***	***80,0***	***80,0***
140	138,0	142,0		80,0		80,0
150	***148,0***	***152,0***		***80,0***		***80,0***
160	158,0	162,0		80,0		80,0
180	***178,0***	***182,0***		***80,0***		***80,0***
200	***198,0***	***202,0***		80,0		80,0
to						
600	***597,0***	***602,0***		***80,0***		***80,0***

Intermediate lengths on Ls possible

Other thread lengths in the range ≥4xd1
to max. standard length permitted

Annex A39

SPAX®
Pan head

Self-tapping screw with full and partial thread

Material: cold rolled wire according to SPAX - Factory standard
Stainless steel screws

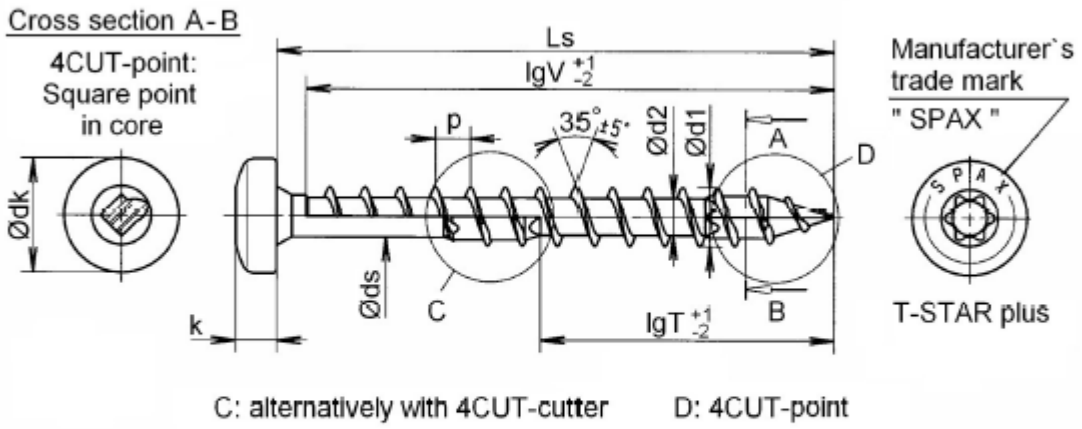

Nominal diameter			8,0	10,0														
d1	thread size		8,1	10,0														
	permissible tolerance		±0,4	±0,5														
dk	head diameter		15,5	19,0														
	permissible tolerance		±0,77	±0,95														
d2	core diameter		5,3	6,1														
	permissible tolerance		±0,3	±0,3														
ds	shamk diameter		5,70	6,80														
	permissible tolerance		±0,25	±0,25														
k	head height max.		6,0	7,1														
p	thread pitch		4,8	6,0														
	permissible tolerance		±0,1 x p	±0,1 x p														
T-STAR plus size			T40	T50														
Ls			Standard thread lengths (full thread=lgV / partial thread = lgT)															
Nom.dim.	min	max	lgV	lgT	lgV	lgT												
40	38,5	41,5	37,0															
45	***43,5***	***46,5***	***42,0***															
50	48,5	51,5	46,0	32,0	40,0													
55	***53,5***	***56,5***	***51,0***	***32,0***	***45,0***													
60	58,5	61,5	56,0	37,0	50,0													
65	***63,5***	***66,5***	***61,0***	***37,0***	***55,0***													
70	68,5	71,5	61,0	42,0	60,0													
75	***73,5***	***76,5***	***70,0***	***42,0***	***60,0***													
80	78,5	81,5	70,0	47,0	70,0	50,0												
90	***88,5***	***91,5***	***80,0***	***52,0***	***80,0***	***55,0***												
100	98,5	101,5	80,0	57,0	80,0	60,0												
110	***108,5***	***111,5***	***80,0***	***70,0***	***80,0***	***80,0***												
120	118,5	121,5	80,0	70,0	80,0	80,0												
130	***128,0***	***132,0***	***80,0***	***70,0***	***80,0***	***80,0***												
140	138,0	142,0		80,0		80,0												
150	***148,0***	***152,0***		***80,0***		***80,0***												
160	158,0	162,0		80,0		80,0												
180	***178,0***	***182,0***		***80,0***		***80,0***												
200	198,0	202,0		80,0		80,0												
to																		
600	***597,0***	***202,0***		***80,0***		***80,0***												

Intermediate lengths on Ls possible

Other thread lengths in the range ≥4xd1
to max. standard length permitted

Annex A40

SPAX®-S

Self-tapping screw with full- thread

Material: Cold rolled wire according to SPAX - Factory Standard

Screws of high-carbon steel

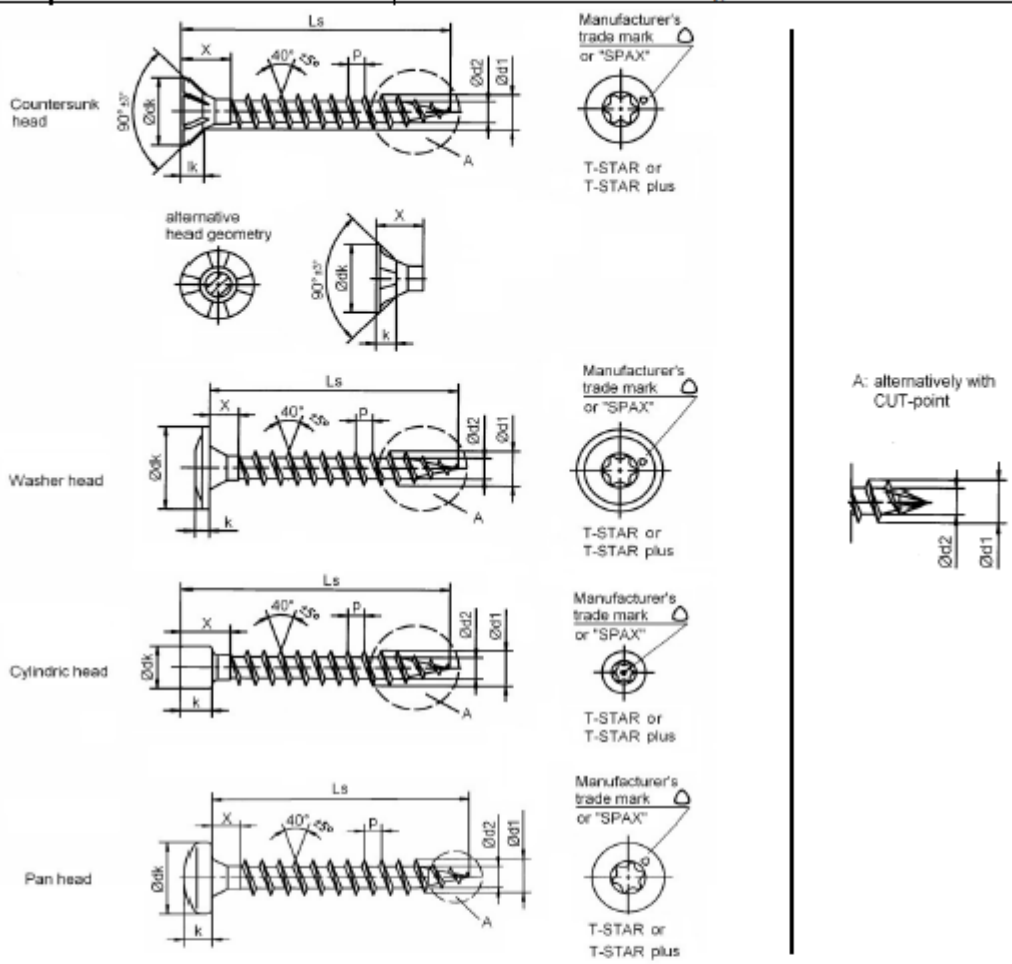

Nominal diameter		6,0						
Type of Head		**Countersunk head**		**Washer head**		**Cylindric head**	**Pan head**	
d1	thread size	6,0						
	permissible tolerance	±0,3						
dk	head diameter	9,7	11,6	13,0	15,0	8,4	9,9	11,9
	permissible tolerance	±0,6		±0,65	±0,75	±0,6		
d2	core diameter	3,8						
	permissible tolerance	±0,3						
k	head height max.	2,9	3,8	2,2	2,4	6,0	3,4	4
p	thread pitch	3,0						
	permissible tolerance	±0,1 x p						
T-STAR size		T20	T30				T20	T30
Thread-free length X	Ls 60-200	max. 15 mm						
permissible tolerance of screw length	Ls 60-99	Ls ±2 mm						
	Ls 100-200	Ls ±5 mm						

☐ =Preferred Version

Annex A41

SPAX®

Self-tapping screw with full- thread

Material: Cold rolled wire according to SPAX - Factory Standard
Screws of high-carbon steel

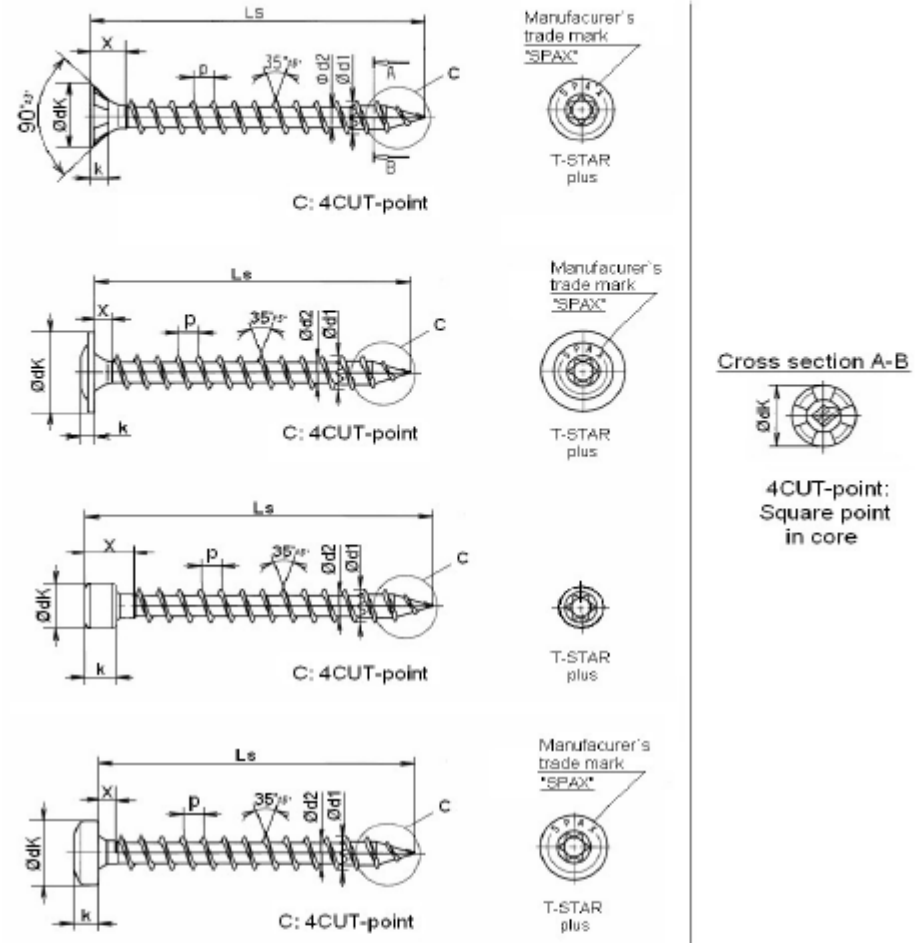

Nominal diameter		6,0						
Type of Head		**Countersunk head**		**Washer head**		**Cylindric head**	**Pan head**	
d1	thread size	6,0						
	permissible tolerance	±0,3						
dk	head diameter	9,7	11,6	13,0	15,0	8,4	9,9	11,9
	permissible tolerance	±0,6		±0,65	±0,75	±0,6		
d2	core diameter	3,9						
	permissible tolerance	±0,3						
k	head height max.	2,9	3,8	2,2	2,4	6,0	3,4	4
p	thread pitch	3,6						
	permissible tolerance	±0,1 x p						
T-STAR plus size		T20	T30				T20	T30
Thread-free length X	Ls 60-200	max. 15 mm						
permissible tolerance of screw length	Ls 60-99	Ls ±2 mm						
	Ls 100-200	Ls ±5 mm						

☐ =Preferred Version

Annex A42

SPAX®-S

Self-tapping screw with full- thread

Material: Cold rolled wire according to SPAX - Factory Standard

Screws of high-carbon steel

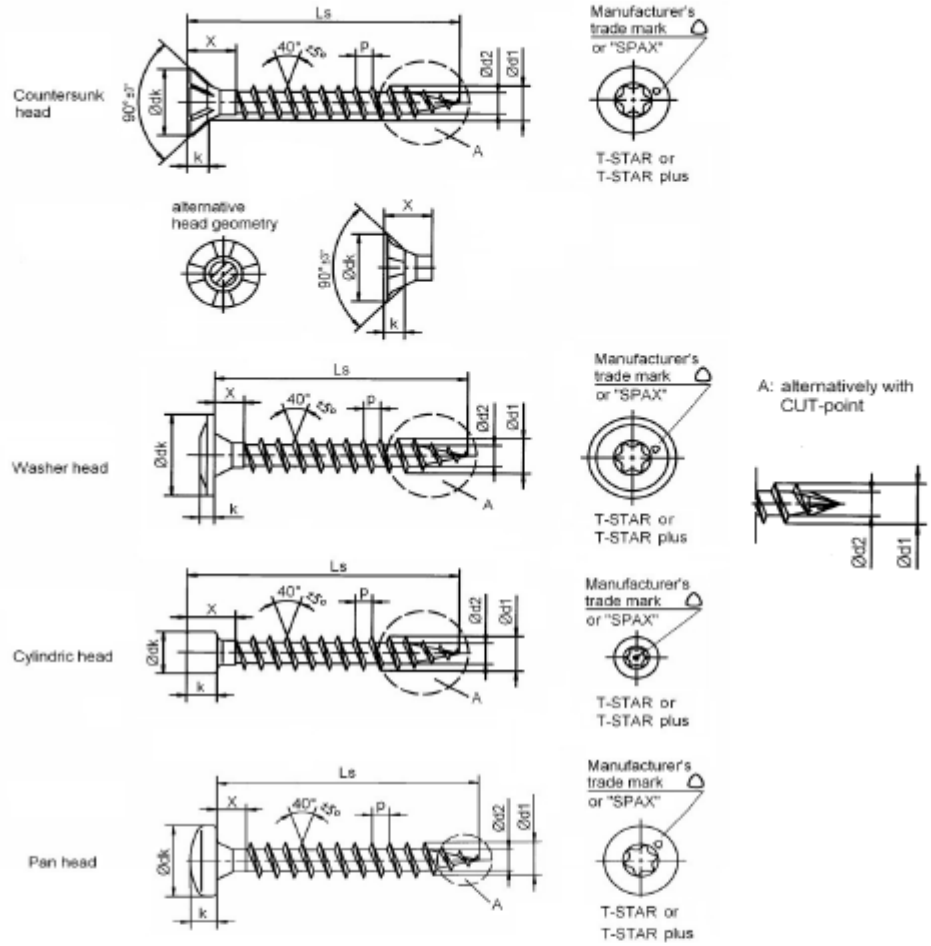

Nominal diameter		8,0								
Type of Head		**Countersunk head**		**Washer head**				**Cylindric head**	**Pan head**	
d1	thread size	8,1								
	permissible tolerance	±0,4								
dk	head diameter	11,6	15,1	18,0	20,0	22,0	24,0	10,0	15,5	11,9
	permissible tolerance	±0,6	±0,75	±0,9	±1,0	±1,1	±1,2	±0,6	±0,75	±0,6
d2	core diameter	5,0								
	permissible tolerance	±0,3								
k	head height max.	3,0	4,8	4,5				8,0	5,8	4,0
p	thread pitch	4,0								
	permissible tolerance	±0,1 x p								
T - STAR	size	T40								T30
Thread-free length X	Ls 60-200	max. 15 mm								
	Ls > 200	max. 25mm								
permissible tolerance of screw length	Ls 60-99	Ls ±2 mm								
	Ls 100-200	Ls ±5 mm								
	Ls > 200	Ls ±15 mm								

Screw lengths Ls up to 600 mm (Lengths > 400 mm with CUT-point) ▭ =Preferred size

Annex A43

SPAX®-S

Self-tapping screw with full- thread

Material: Cold rolled wire according to SPAX - Factory Standard
Screws of high-carbon steel

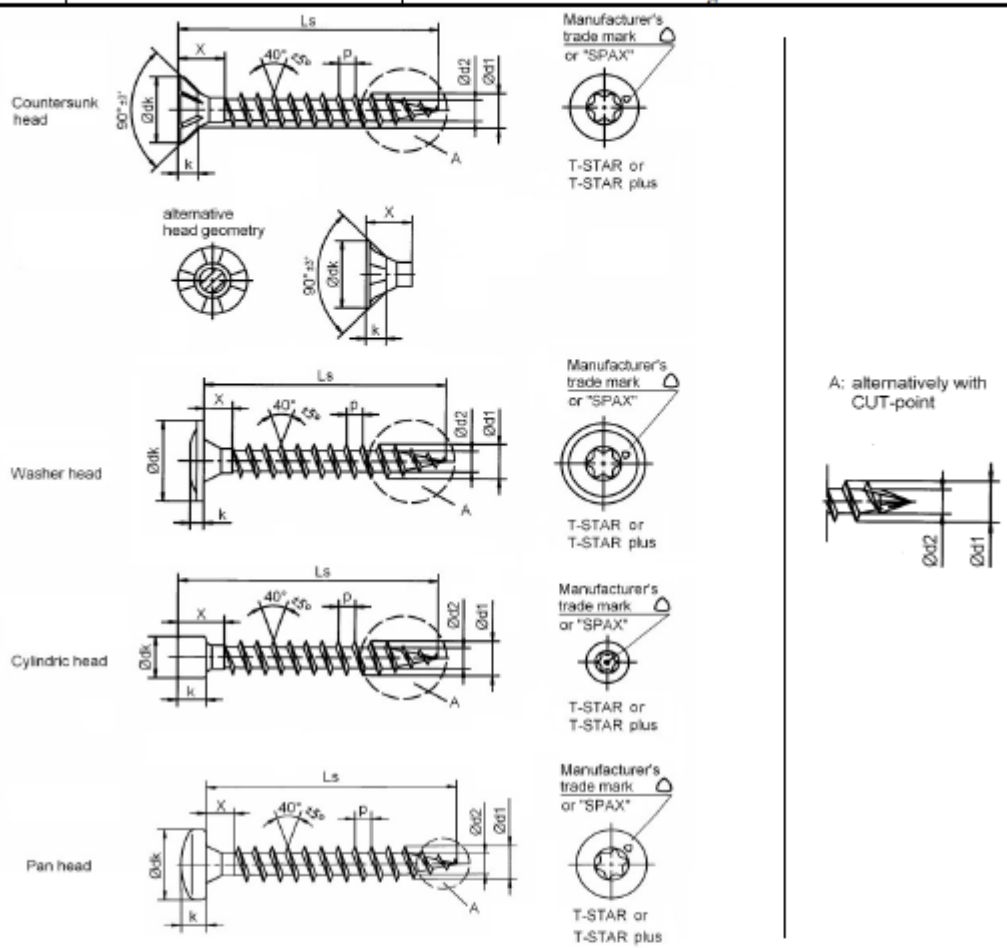

Nominal diameter		10,0						
Type of Head		Countersunk head		Washer head		Cylindric head	Pan head	
d1	thread size	10,0						
	permissible tolerance	±0,5						
dk	head diameter	15,1	18,6	20,0	25,0	12,0	19,0	15,5
	permissible tolerance	±0,75	±0,93	±1,0	±1,25	±0,6	±0,95	±0,75
d2	core diameter	6,1						
	permissible tolerance	±0,3						
k	head height max.	4,2	6,0	5,0	5,0	10,0	7,1	5,8
p	thread pitch	5,0						
	permissible tolerance	±0,1 x p						
T - STAR size		T50		T40		T50		T40
Thread-free length X	Ls 60-200	max. 15 mm						
	Ls > 200	max. 25 mm						
permissible tolerance of screw length	Ls 60-99	Ls ±2 mm						
	Ls 100-200	Ls ±5 mm						
	Ls > 200	Ls ±15 mm						

Screw lengths Ls to 800 mm possible

▭ = Preferred size

Annex A44

SPAX®-S

Self-tapping screw with full- thread

Material: Cold rolled wire according to SPAX - Factory Standard
Screws of high-carbon steel

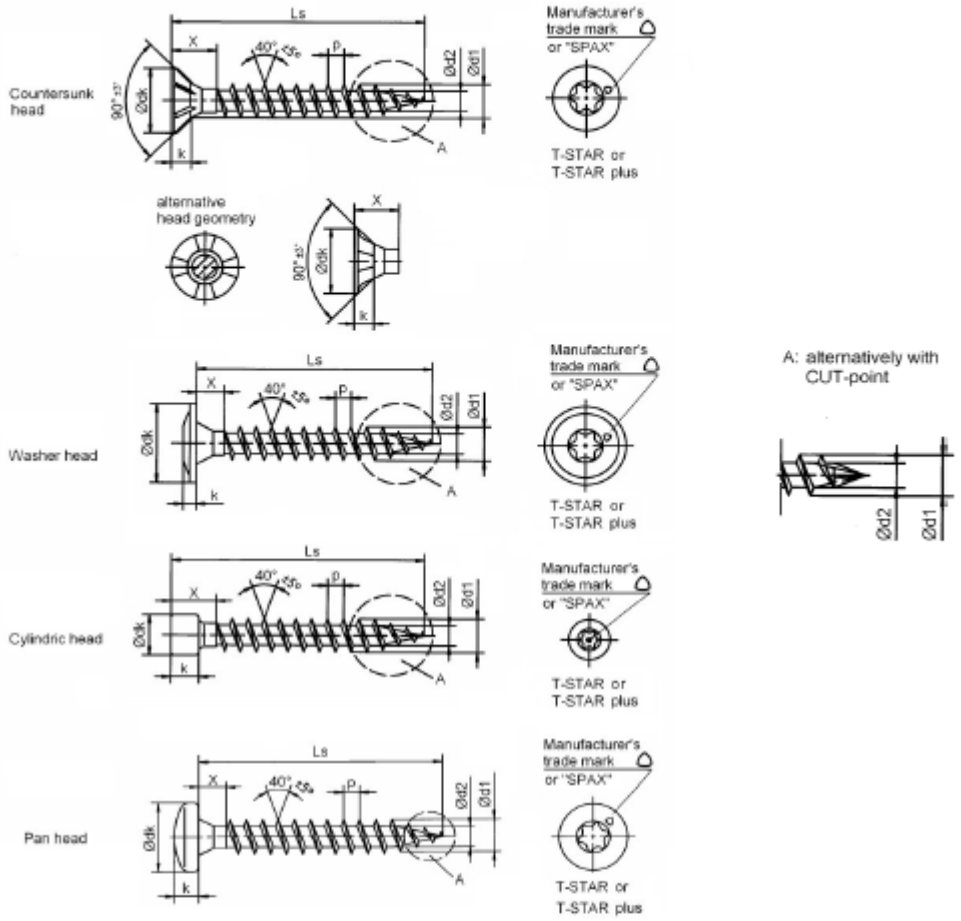

Nominal diameter		12,0						
Type of Head		Countersunk head		Washer head		Cylindric head	Pan head	
d1	thread size	12,0						
	permissible tolerance	±0,6						
dk	head diameter	18,6	22,6	25,0	29,0	14,0	23,0	19,0
	permissible tolerance	±0,93	±1,13	±1,25	±1,45	±0,7	±1,13	±0,95
d2	core diameter	7,35						
	permissible tolerance	±0,35						
k	head height max.	5,2	7,1	6,0		12,0	8,5	7,1
p	thread pitch	6,0						
	permissible tolerance	±0,1 x p						
T - STAR	size	T50						
Thread-free length X	Ls 60-99	max. 15 mm						
	Ls 100-200	max. 20 mm						
	Ls > 200	max. 25 mm						
permissible tolerance of screw length	Ls 60-99	Ls ±2 mm						
	Ls 100-200	Ls ±10 mm						
	Ls > 200	Ls ±15 mm						

Screw lengths Ls to 600 mm possible

☐ =Preferred size

Annex A45

SPAX®

Self-tapping screw with full- thread

Material: Cold rolled wire according to SPAX - Factory Standard
Stainless steel screws

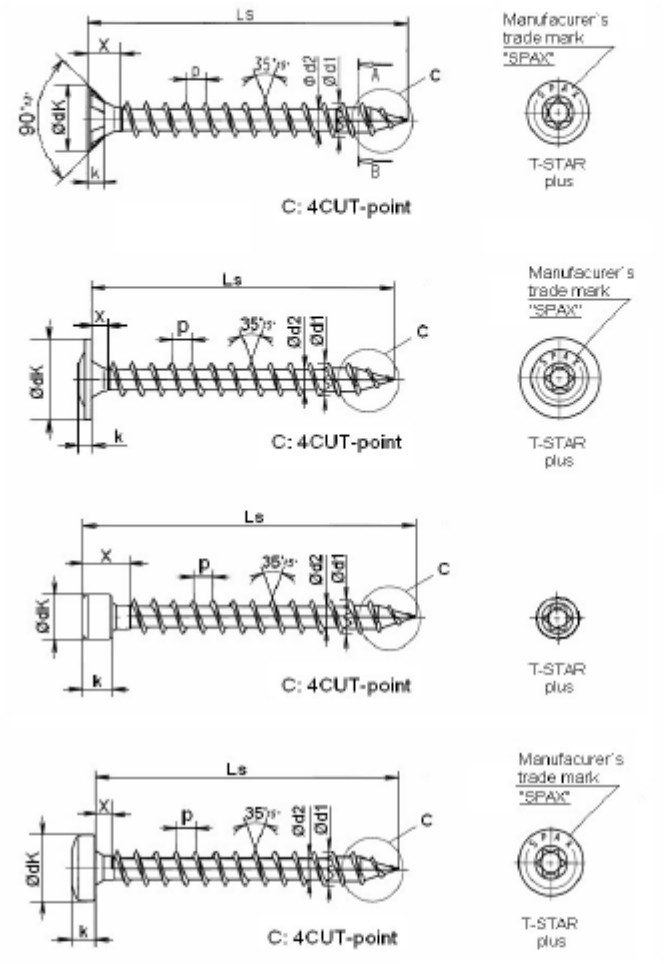

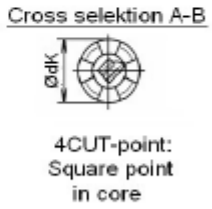

Nominal diameter		6,0						
Type of Head		**Countersunk head**		**Washer head**		**Cylindric head**	**Pan head**	
d1	thread size	6,1						
	permissible tolerance	±0,3						
dk	head diameter	9,7	11,6	13,0	15,0	8,4	11,9	9,9
	permissible tolerance	±0,6		±0,65	±0,75	±0,6		
d2	core diameter	4,0						
	permissible tolerance	±0,3						
k	head height max.	2,9	3,8	2,2	2,4	6,0	4,0	3,4
p	thread pitch	3,6						
	permissible tolerance	±0,1 x p						
T-STAR plus size		T30						T20
Thread-free length X	Ls 60-200	max. 15 mm						
permissible tolerance of screw length	Ls 60-99	Ls ±2 mm						
	Ls 100-200	Ls ±5 mm						

☐ =Preferred Version

Annex A46

SPAX®-S

Self-tapping screw with full- thread

Material: Cold rolled wire according to SPAX Factory - Standard Stainless steel screws

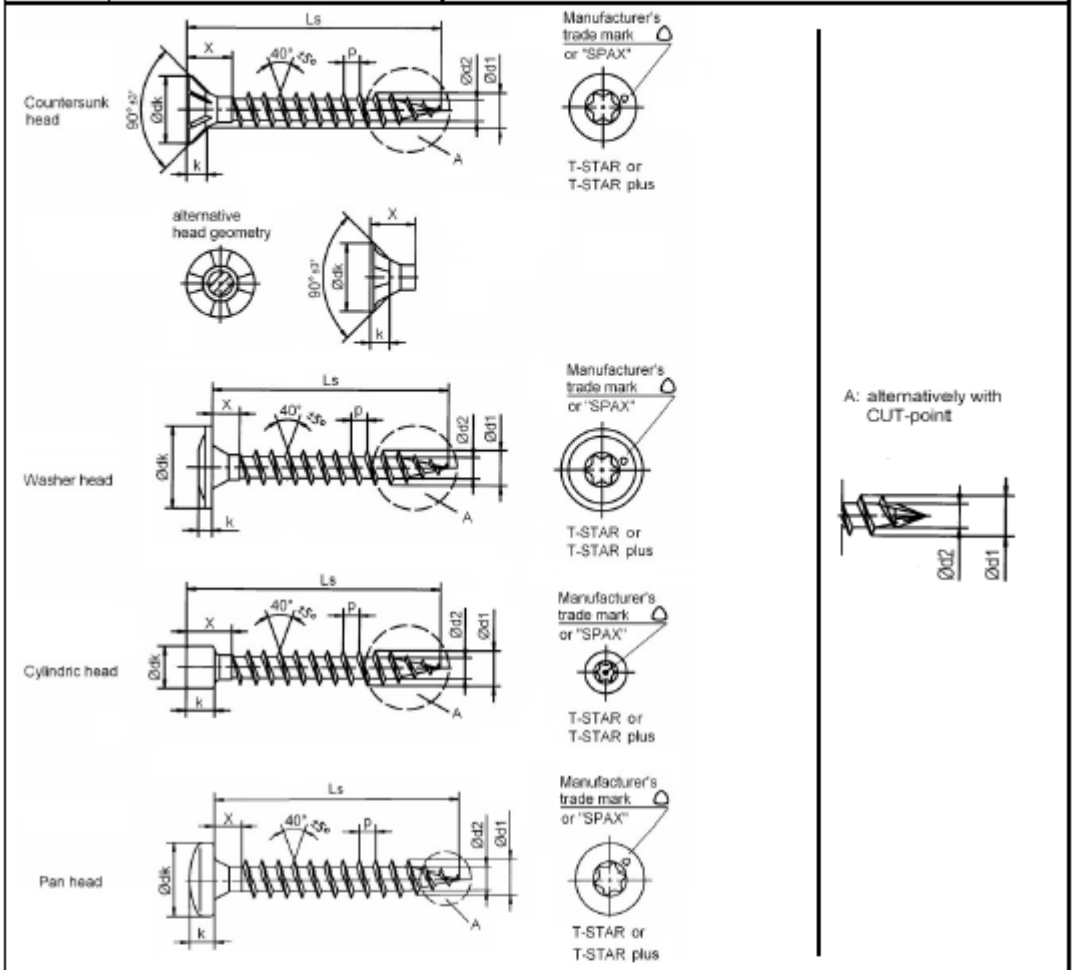

Nominal diameter		8,0								
Type of Head		Countersunk head		Washer head				Cylindric head	Pan head	
d1	thread size	8,1								
	permissible tolerance	±0,4								
dk	head diameter	11,6	15,1	18,0	20,0	22,0	24,0	10,0	15,5	11,9
	permissible tolerance	±0,6	±0,75	±0,9	±1,0	±1,1	±1,2	±0,6	±0,75	±0,6
d2	core diameter	5,0								
	permissible tolerance	±0,3								
k	head height max.	3,0	4,8	4,5				8,0	5,8	4,0
p	thread pitch	4,0								
	permissible tolerance	±0,1 x p								
T - STAR size		T40								T30
Thread-free length X	Ls 60-200	max. 15 mm								
	Ls > 200	max. 25 mm								
permissible tolerance of screw length	Ls 60-99	Ls ±2 mm								
	Ls 100-200	Ls ±5 mm								
	Ls > 200	Ls ±15 mm								

Screw lengths Ls up to 600 mm (Lengths > 400 mm with CUT-point) ▭ =Preferred size

Annex A47

SPAX®-S

Self-tapping screw with full- thread

Material: Cold rolled wire according to SPAX - Factory Standard

Stainless steel screws

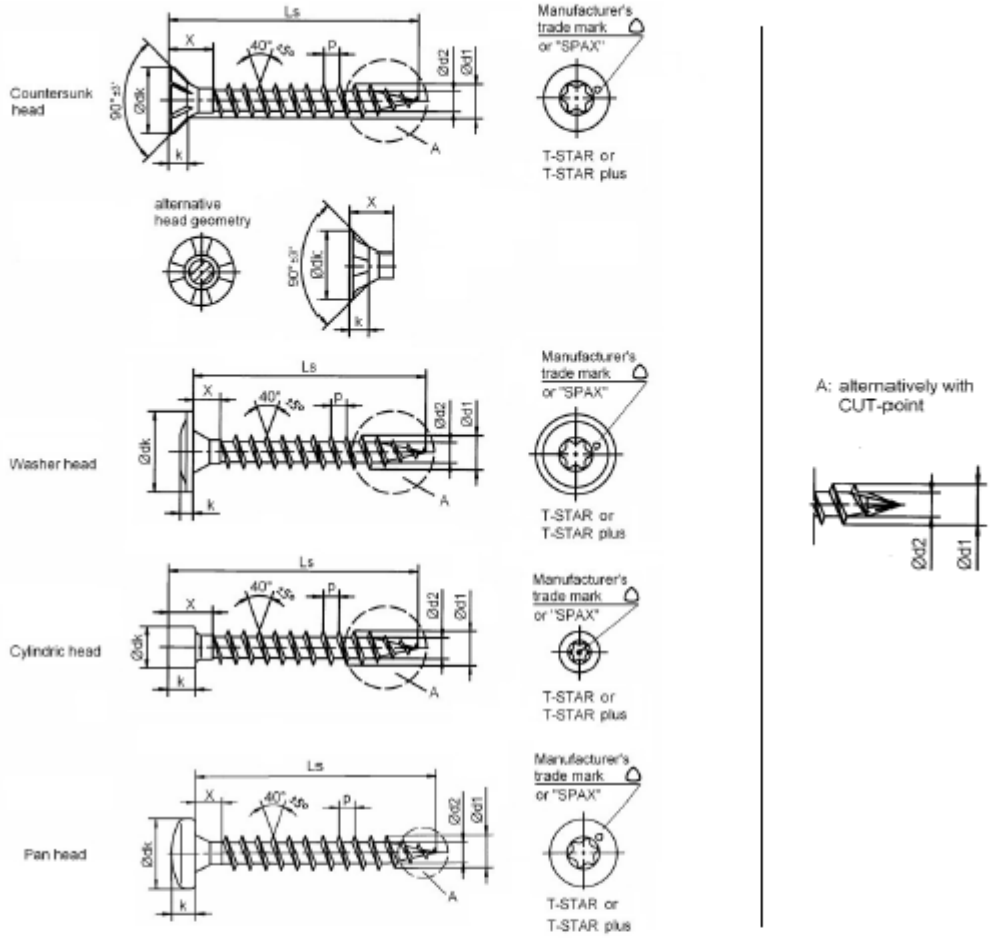

Nominal diameter		10,0						
Type of Head		Countersunk head		Washer head		Cylindric head	Pan head	
d1	thread size	10,0						
	permissible tolerance	±0,5						
dk	head diameter	15,1	18,6	20,0	25,0	12,0	19,0	15,5
	permissible tolerance	±0,75	±0,93	±1,0	±1,25	±0,6	±0,95	±0,77
d2	core diameter	6,1						
	permissible tolerance	±0,3						
k	head height max.	4,2	6,0	5,0	5,0	10,0	7,1	5,8
p	thread pitch	5,0						
	permissible tolerance	±0,1 x p						
T - STAR	size	T50		T40		T50		T40
Thread-free length X	Ls 60-200	max. 15 mm						
	Ls > 200	max. 25 mm						
permissible tolerance of screw length	Ls 60-99	Ls ±2 mm						
	Ls 100-200	Ls ±5 mm						
	Ls > 200	Ls ±15 mm						

Screw lengths Ls to 800 mm possible

▭ = Preferred size

Annex A48

SPAX®-S

Self-tapping screw with full- thread

Material: Cold rolled wire according to SPAX - Factory Standard
Stainless steel screws

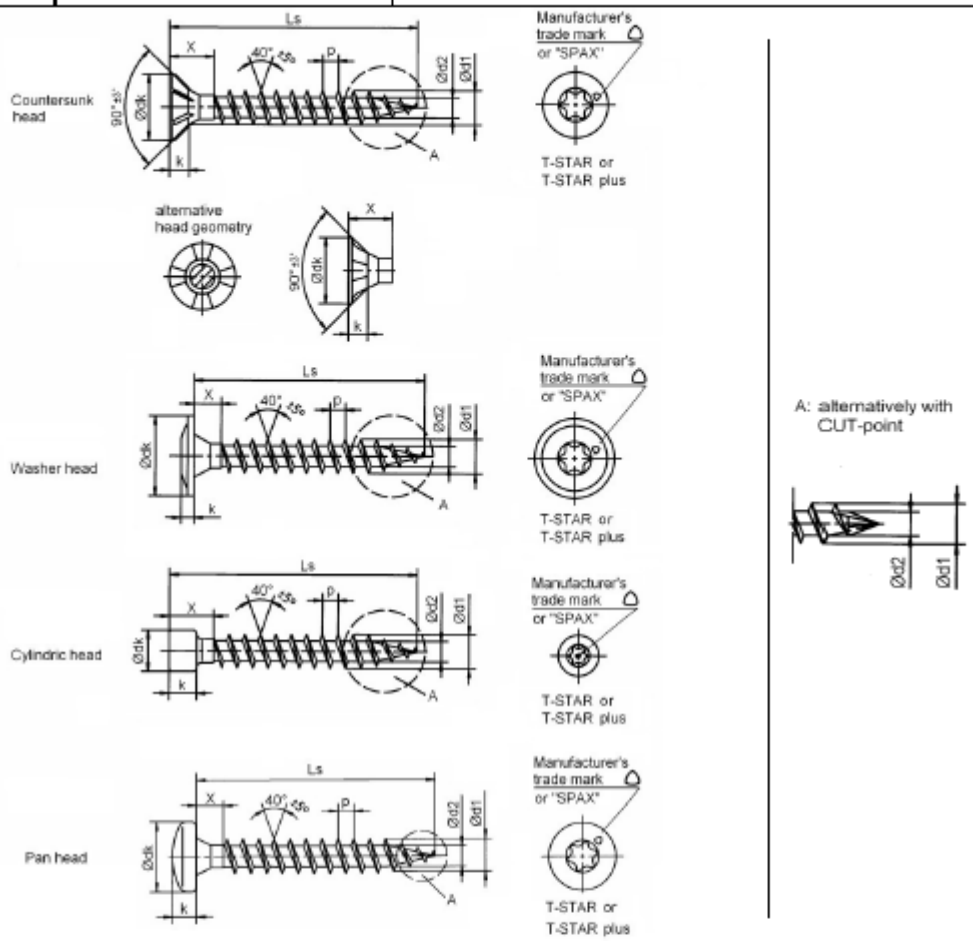

Nominal diameter		12,0						
Type pf Head		Countersunk head		Washer head		Cylindric head	Pan head	
d1	thread size	12,0						
	permissible tolerance	±0,6						
dk	head diameter	18,6	22,6	25,0	29,0	14,0	23,0	19,0
	permissible tolerance	±0,75	±0,93	±1,25	±1,45	±0,7	±1,15	±0,95
d2	core diameter	7,35						
	permissible tolerance	±0,35						
k	head height max.	5,2	7,1	6,0		12,0	8,5	7,1
p	thread pitch	6,0						
	permissible tolerance	±0,1 x p						
T - STAR	size	T50						
Thread-free length X	Ls 60-99	max. 15 mm						
	Ls 100-200	max. 20 mm						
	Ls > 200	max. 25 mm						
permissible tolerance of screw length	Ls 60-99	Ls ±2 mm						
	Ls 100-200	Ls ±10 mm						
	Ls > 200	Ls ±15 mm						

Screw lengths Ls to 600 mm possible

☐ =Preferred size

Annex A49

SPAX®-S

Hex. head with/without flange

Self-tapping screw with full- thread

Material: Cold rolled wire according to SPAX - Factory Standard

Screws of high-carbon steel

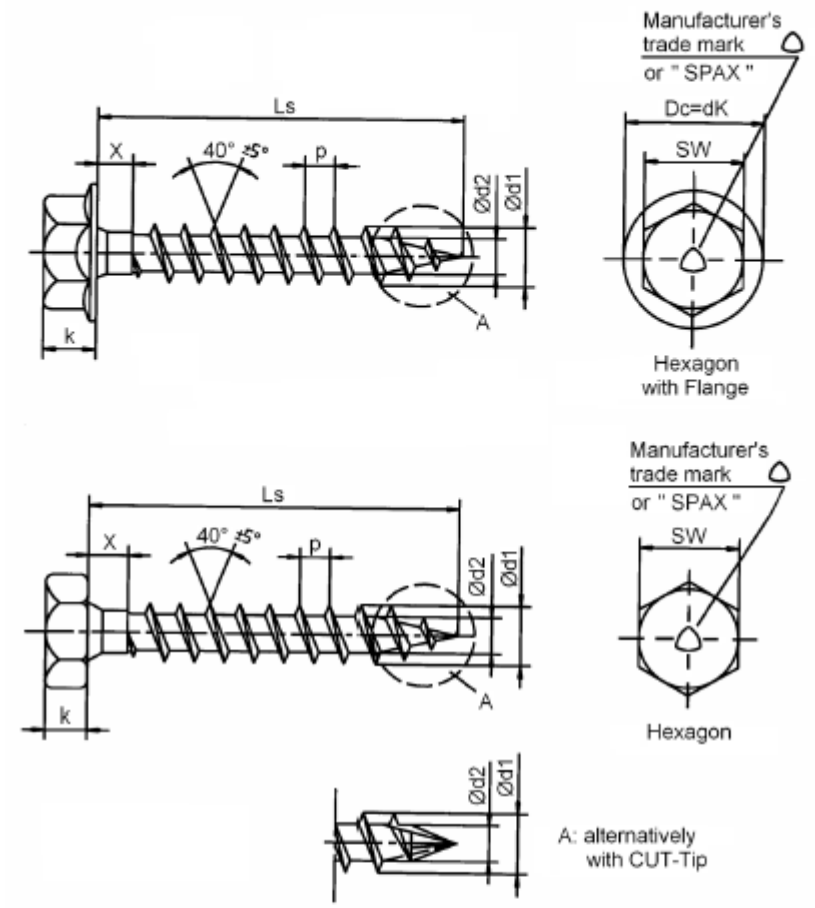

Nominal diameter			8,0		10,0		12,0	
Type of Head			without flange	with flange	without flange	with flange	without flange	with flange
SW	wrench size		10		13		16	
k	head height max.		6,00	8,5	7,00	9,7	8,00	12,1
Dc	diameter of flange			15,5		19,5		22,5
	permissible tolerance			±0,77		±0,97		±1,12
d1	thread diameter		8,1		10,0		12,0	
	permissible tolerance		±0,4		±0,5		±0,6	
d2	core diameter		5,0		6,1		7,35	
	permissible tolerance		±0,3				±0,35	
p	thread pitch		4,0		5,0		6,0	
	permissible tolerance		±0,1 x p					
thread-free length X		Ls 60-99	max. 15 mm		max. 15 mm		max. 15 mm	
		Ls 100-200					max. 20 mm	
		Ls > 200	max. 25 mm		max. 25 mm		max. 25 mm	
permissible tolerance of screw length		Ls 60-99	Ls ±2 mm				Ls ±2 mm	
		Ls 100-200	Ls ±5 mm				Ls ±10 mm	
		Ls > 200	Ls ±15 mm				Ls ±15 mm	

Screw lengths Ls up to 600 mm possible (at a nominal diameter of 8,0 mm lengths > 400 mm with CUT-point)

Annex A50

	SPAX® Washer	Washer for screws with countersunk and raised countersunk head Material: machining steel Dimensions in mm

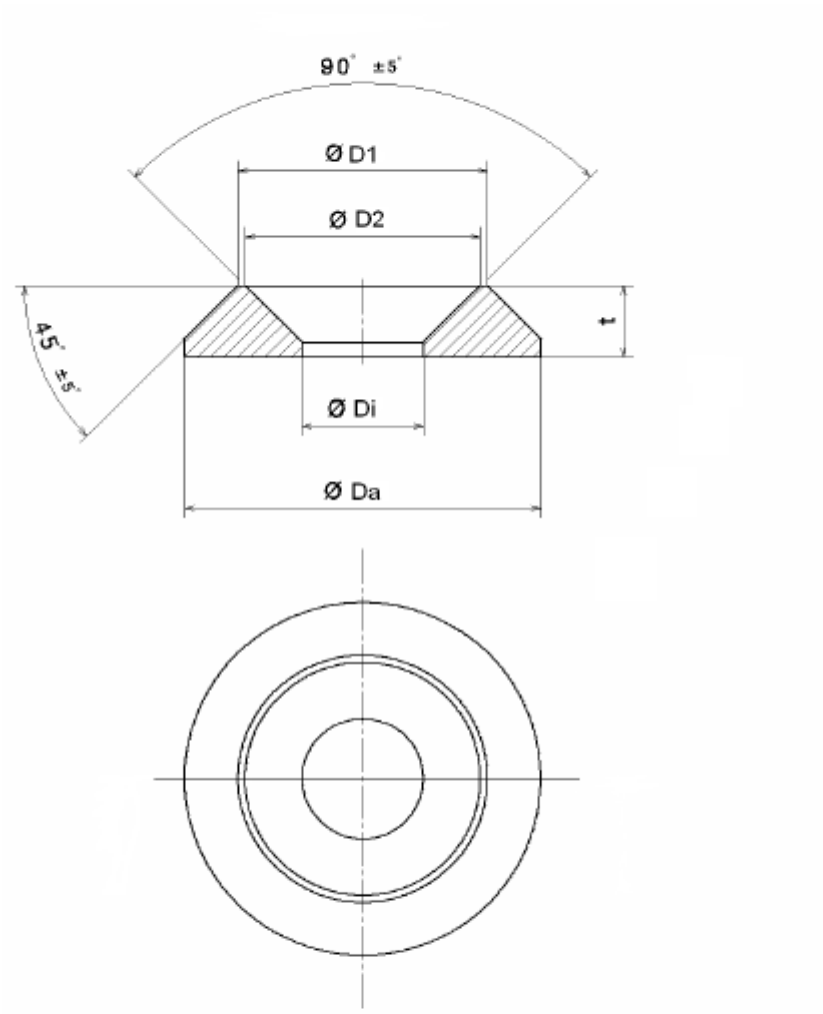

Thread size	6,0	8,0	10,0	12,0	Tolerance
ØDa	18,0	25,0	32,0	40,0	± 0,3
ØDi	6,5	8,5	11,0	13,0	
ØD1	13,5	17,5	22,5	27,0	
ØD2	12,5	16,5	21,5	26,0	
t	3,5	5,0	5,6	7,0	

Annex A51

SPAX®

Threaded rod with full thread

Material: Steel or Stainless steel

Design with hexagon head

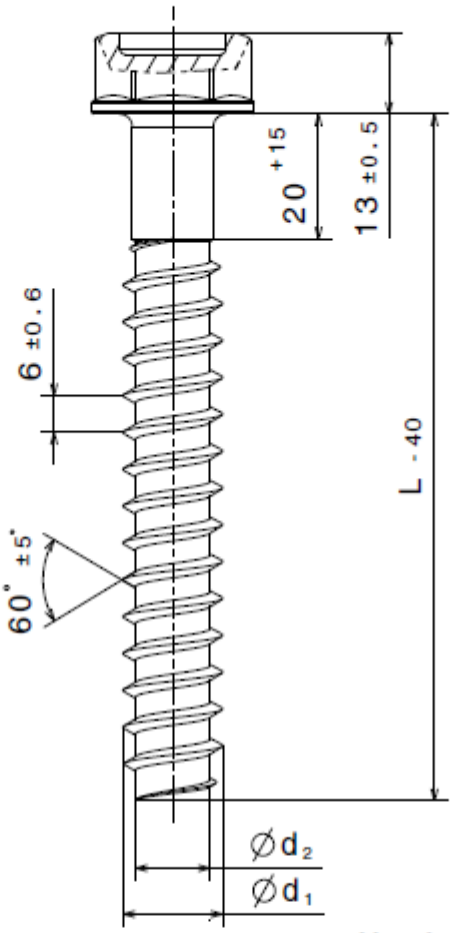

L
800
1000
1200
1400
1600
1800
2000
2200

Manufacturer's trade mark:
ABC or SPAX

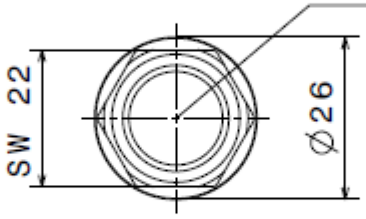

stainless steel	16 ±0.8	12 ±0.6
Steel	16 ±0.8	12 ±0.6
Execution	Ø d_1	Ø d_2

- Other lengths 100 - 3000 mm possible
- Length can be changed by cutting the threaded part

Annex A52

SPAX®

Threaded rod with full thread

Material: steel or stainless steel

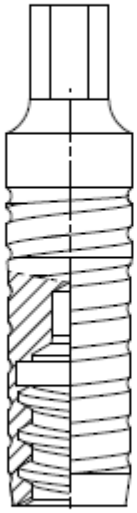

Screw adapter
available as accessory

L
3000

Version without head

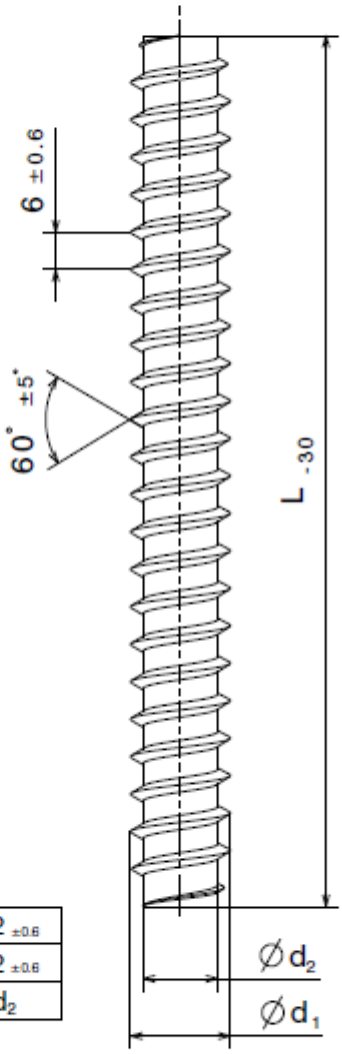

stainless steel	16 ±0.8	12 ±0.6
Steel	16 ±0.8	12 ±0.6
Execution	Ø d_1	Ø d_2

- Other lengths 100 - 3000 mm possible
- Length can be changed by cutting the threaded part

Annex A53

SPAX®

Self-tapping screw with CUT-point

Material: cold rolled wire according to SPAX - Factory Standard
Screws of high carbon steel

Screw with CUT-point

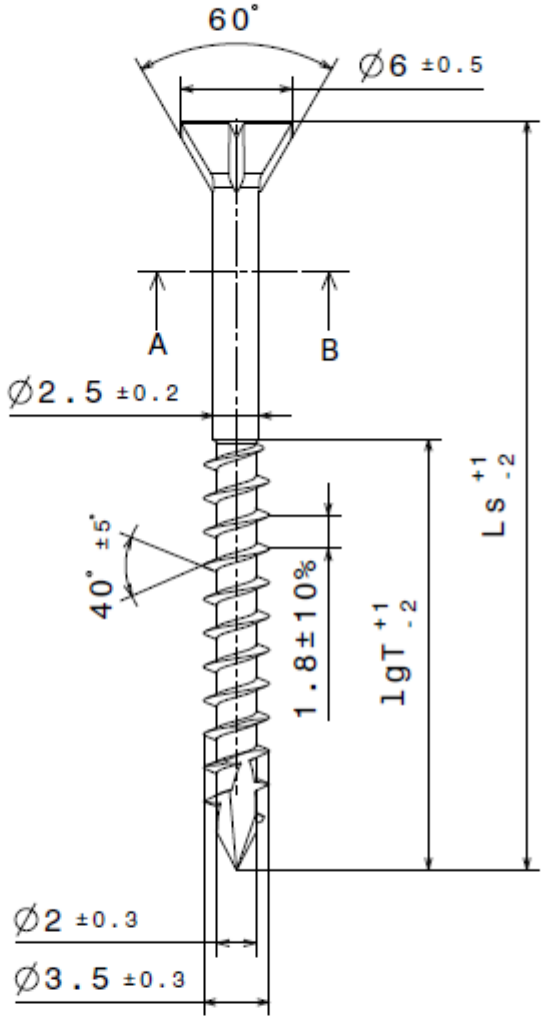

Cross section A-B

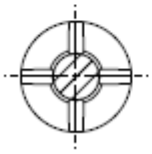

55	35
45	28
35	20
Ls	lgT*

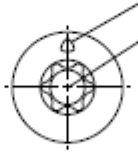

*other thread lengths (lgT)
are acceptable if
lgT > 4 x 3,5

Annex A54

SPAX®	Self-tapping flat countersunk head screw with CUT-point
	Material: cold rolled wire according to SPAX - Factory Standard Screws of high carbon steel

Screw with CUT-point

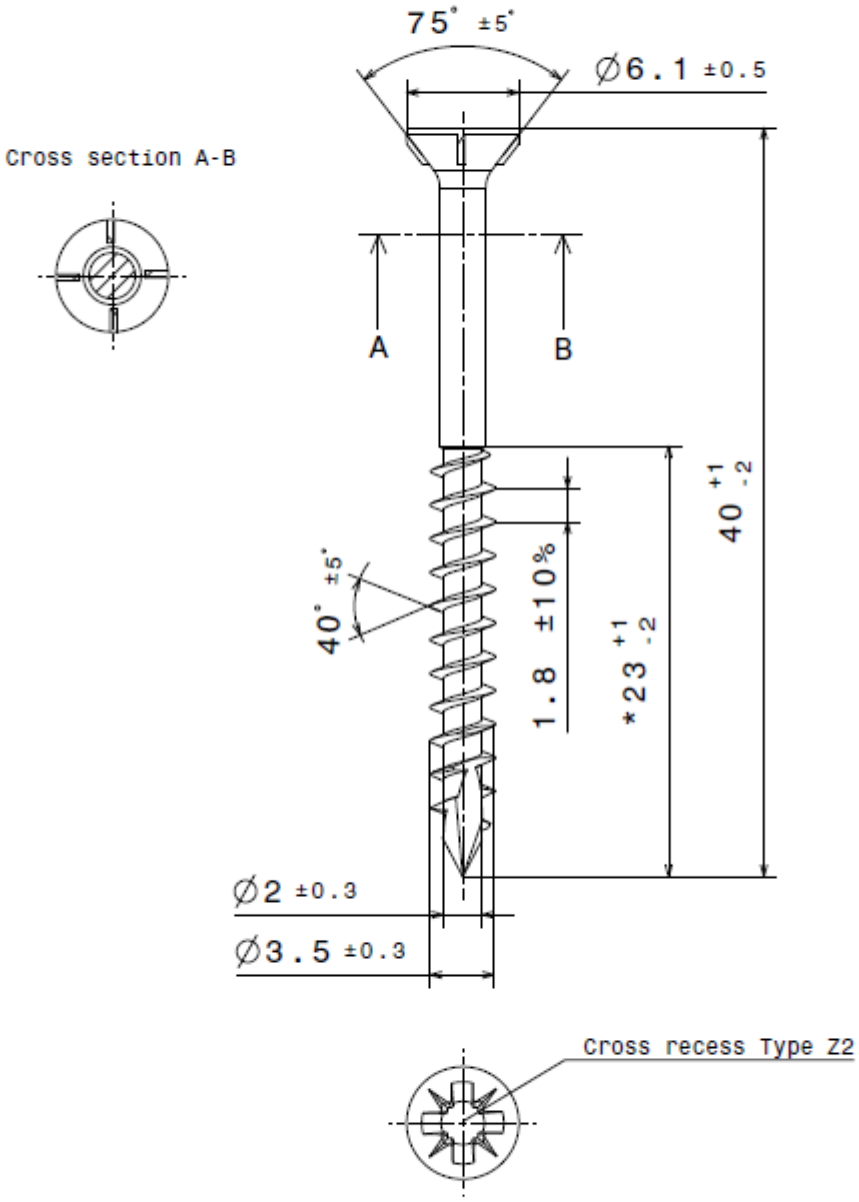

*other thread lengths (lgT)
are acceptable if
lgT > 4 x 3,5

Annex A55

SPAX®

Self-tapping flat countersunk head screw with fixing thread

Material: cold rolled wire according to SPAX - Factory Standard
Screws of high carbon steel

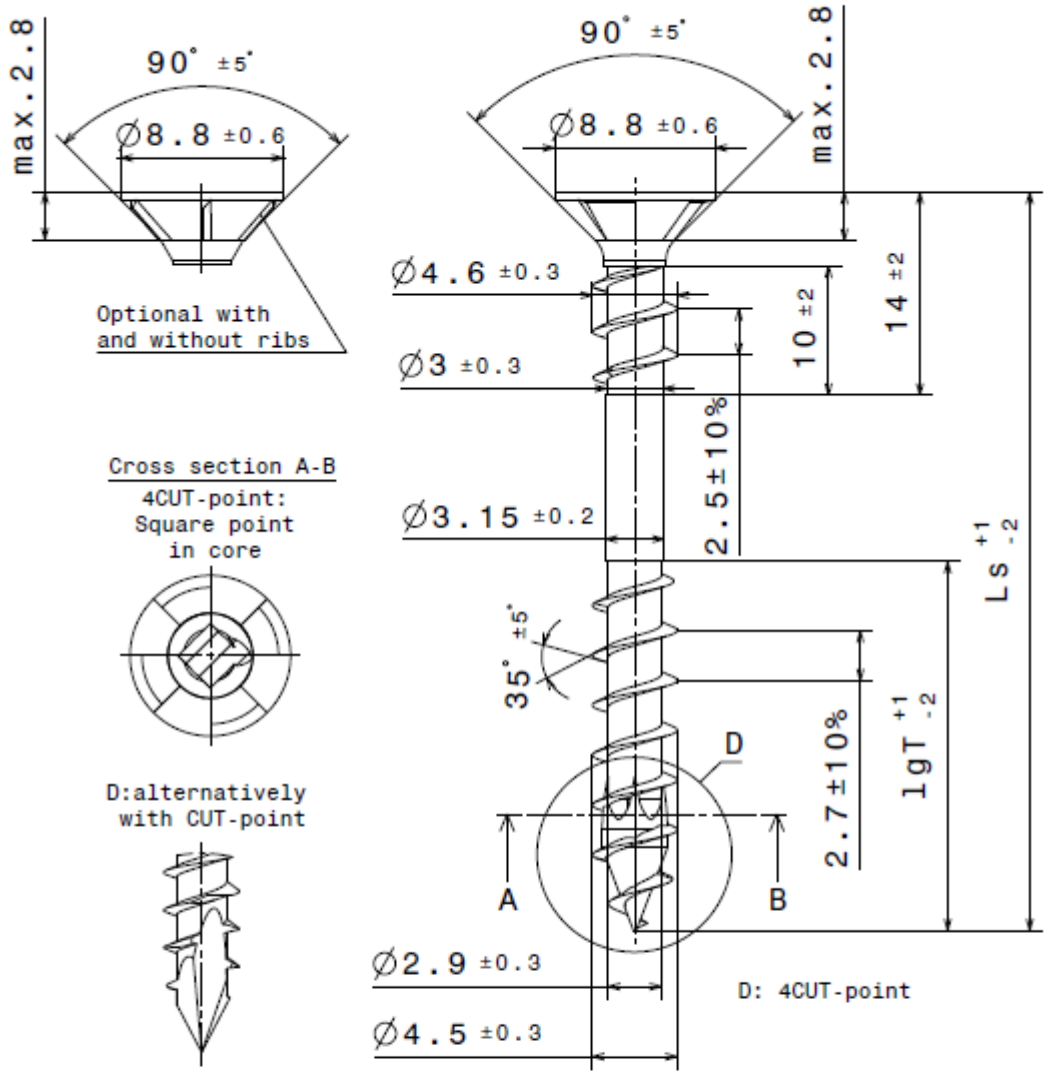

90	31
80	31
70	31
60	26
50	21
Ls	lgT*

*other thread lengths (lgT)
are acceptable if
lgT > 4 x Ø4,5

Manufacturer`s trade mark
"SPAX"

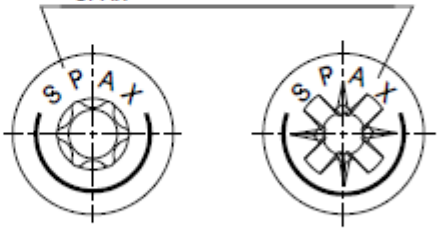

T-STAR plus
T20

Cross recess
Typ Z 2

Annex A56

SPAX®

Self-tapping raised countersunk head screw with fixing thread

Material: cold rolled wire according to SPAX - Factory Standard
Screws of high carbon steel

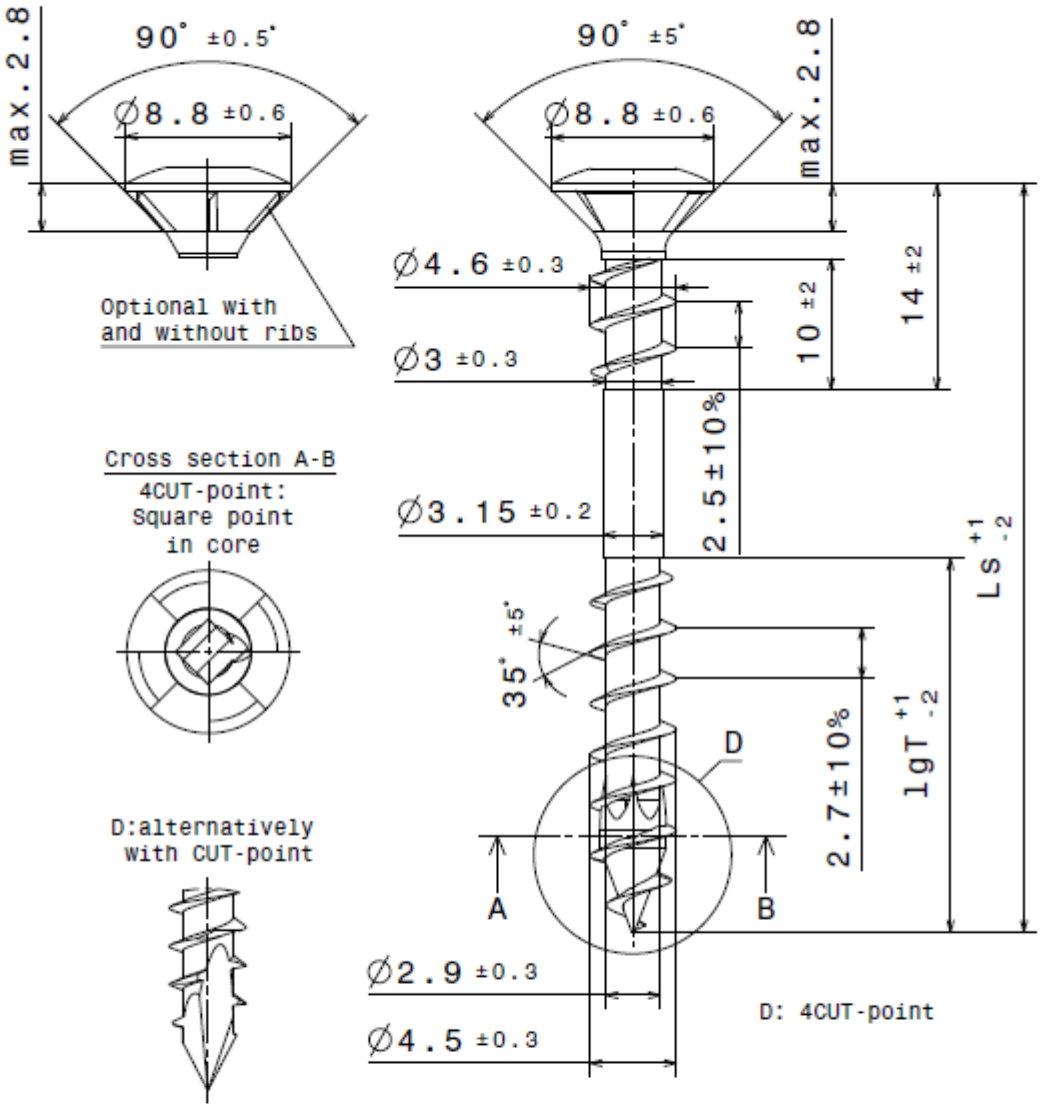

80	31
70	31
60	26
50	21
Ls	lgT*

*other thread lengths (lgT)
are acceptable if
lgT > 4 x Ø4,5

Manufacturer`s trade mark
"SPAX"

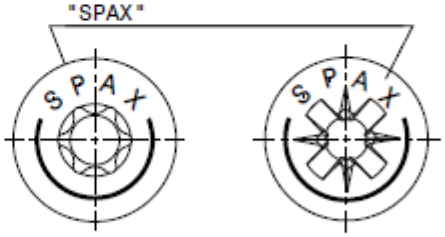

T-STAR plus
T20

Cross recess
Typ Z 2

Annex A57

SPAX®

Self-tapping countersunk head screw with fixing thread

Material: cold rolled wire according to SPAX - Factory Standard
Stainless steel screws

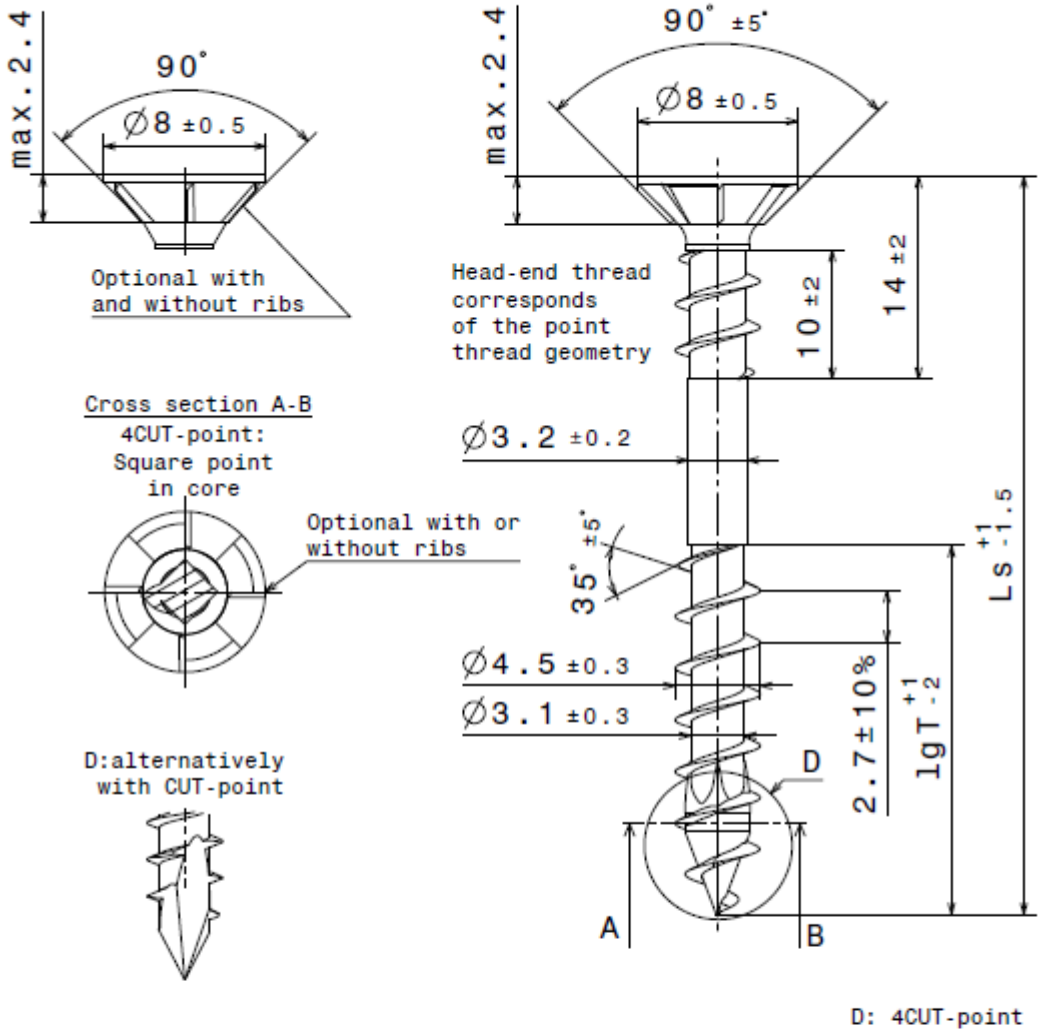

Ls	lgT*
43	20
50	26,5
60	26,5
70	31,5

*other thread lengths(lgT)
are acceptable if
lgT > 4 x Ø4,5

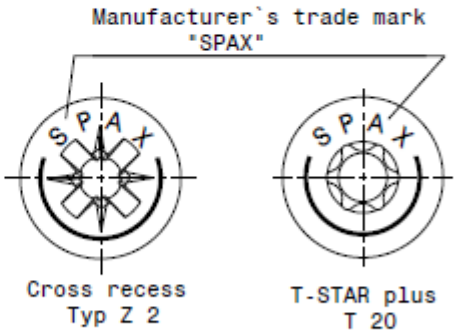

Annex A 58

SPAX®

Self-tapping raised countersunk head screw with fixing thread

Material: cold rolled wire according to SPAX - Factory Standard
Stainless steel screws

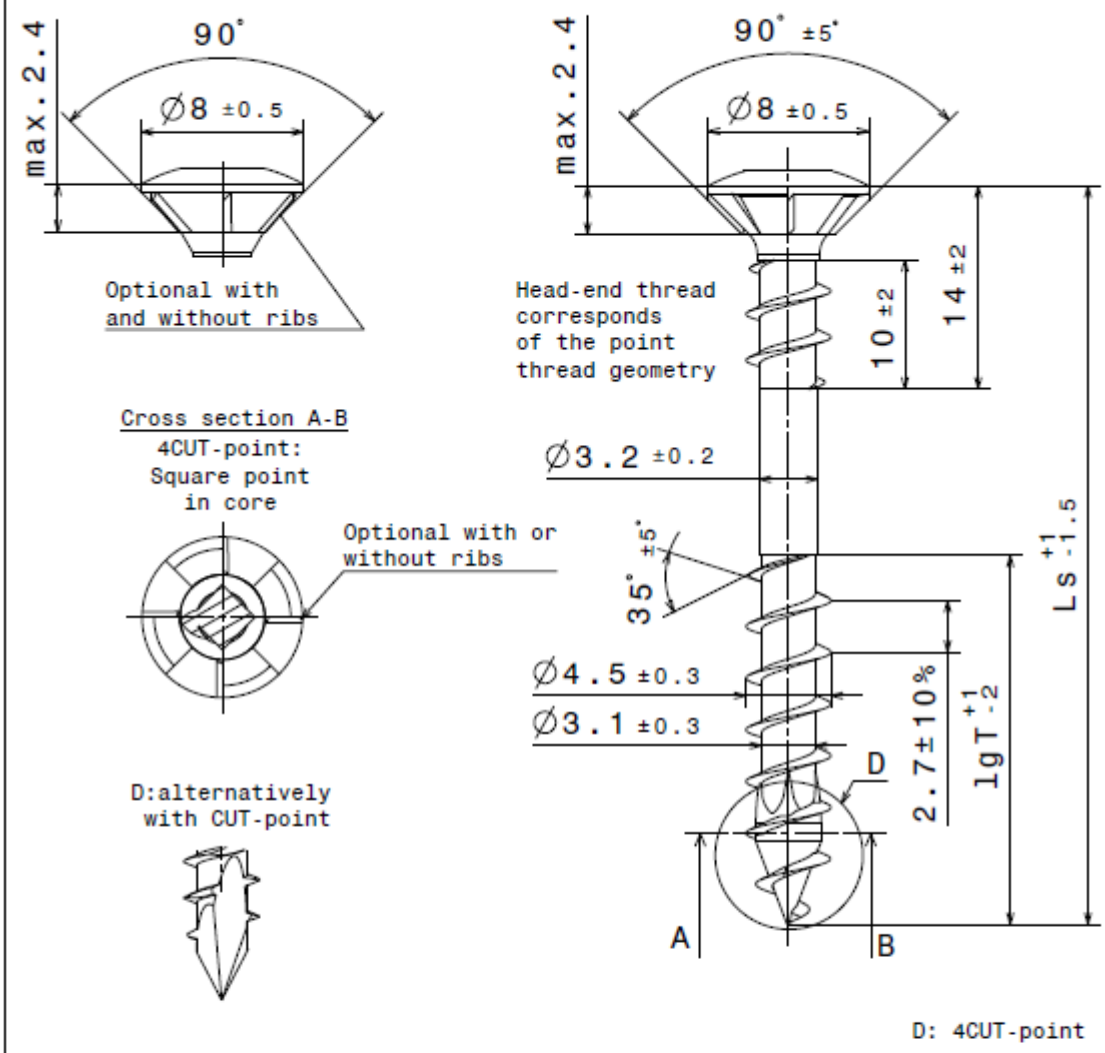

Ls	lgT*
43	20
50	26,5
60	26,5
70	31,5

*other thread lengths(lgT)
are acceptable if
lgT > 4 x Ø4,5

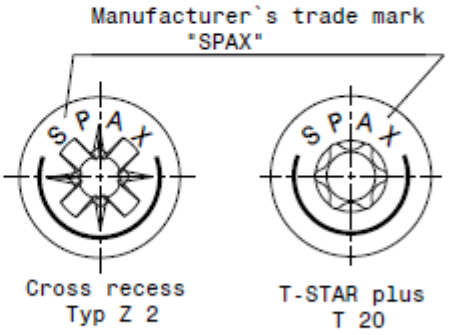

Annex A 59

SPAX®

Self-tapping cylindric head screw with fixing thread

Material: cold rolled wire according to SPAX - Factory Standard
Screws of high carbon steel

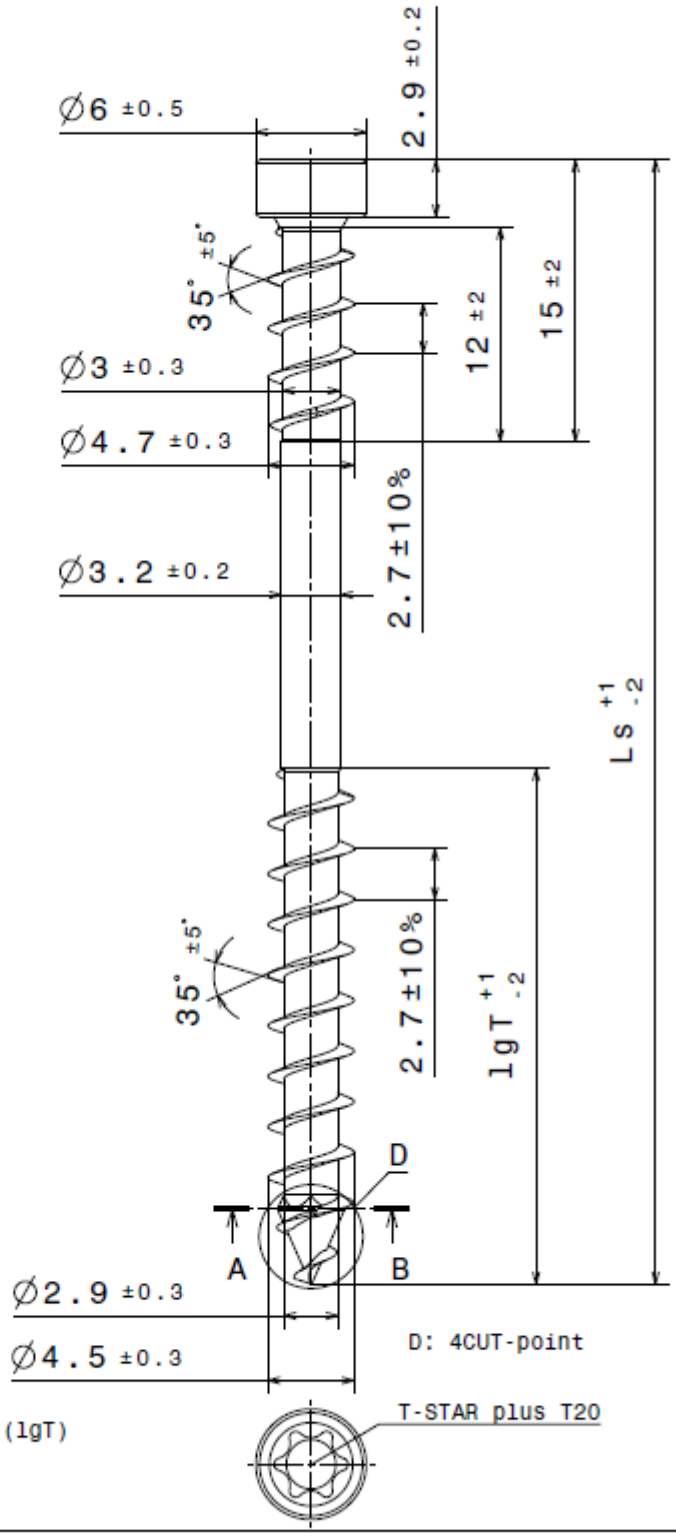

Cross section A-B

4CUT-point:
Square point
in core

80	32
70	32
60	27
50	22
40	17
Ls	lgT*

*other thread lengths (lgT)
are acceptable if
lgT > 4 x Ø4,6

Annex A60

SPAX®

Self-tapping raised countersunk head screw with CUT-point

Material: cold rolled wire according to SPAX - Factory Standard
Stainless steel screws

Screws with CUT-point

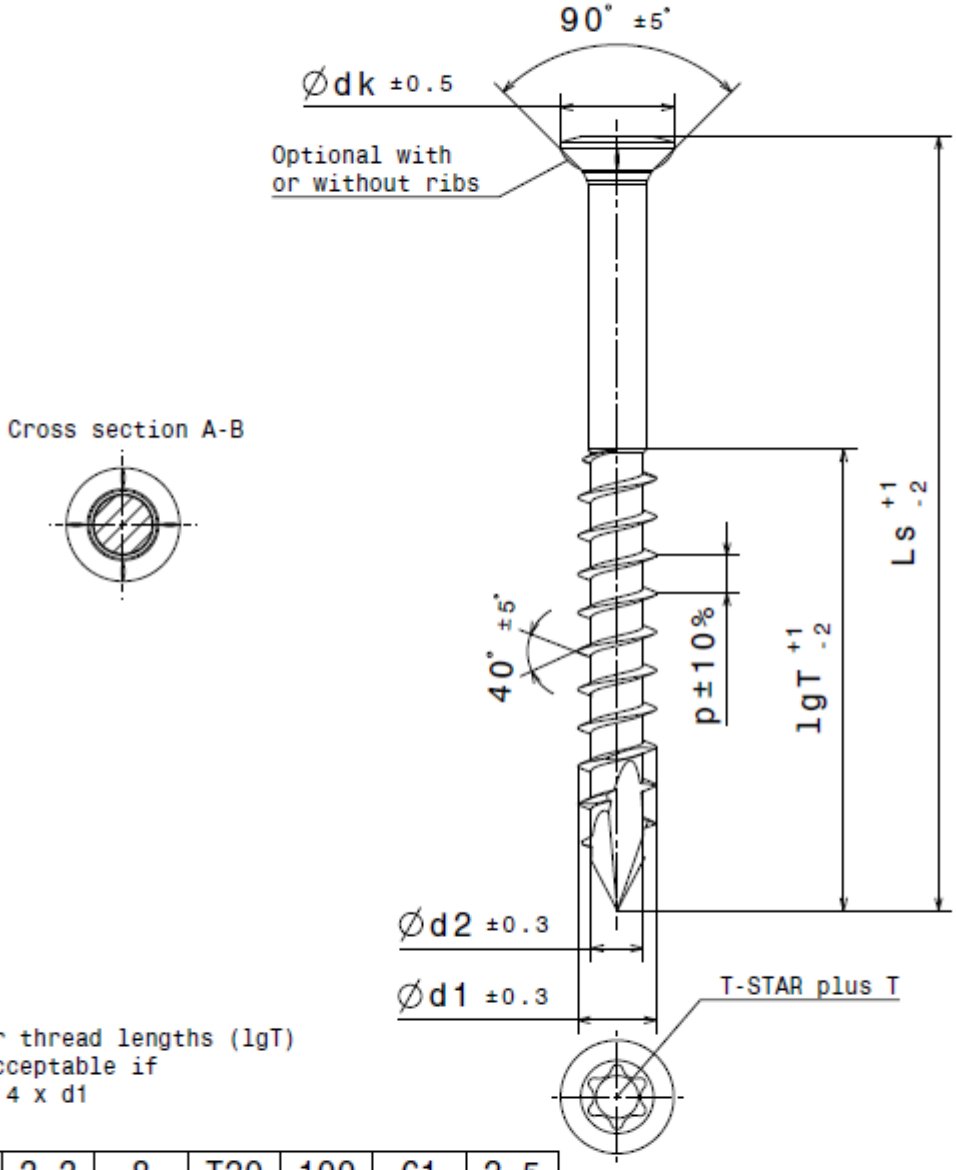

*other thread lengths (lgT)
are acceptable if
lgT > 4 x d1

5,0	3,3	8	T20	100	61	2,5
4,5	3	7	T15	70	42	2,2
4,0	2,7	6	T15	60	30	2
4,0	2,7	6	T15	45	30	2
4,0	2,7	6	T15	40	24	2
4,0	2,7	6	T15	35	18	2
d1	d2	dk	T	Ls	lgT*	p

Annex A61

SPAX®

Self-tapping cylindric head screw with fixing thread

Material: cold rolled wire according to SPAX - Factory Standard
Stainless steel screw

Screw with CUT-point

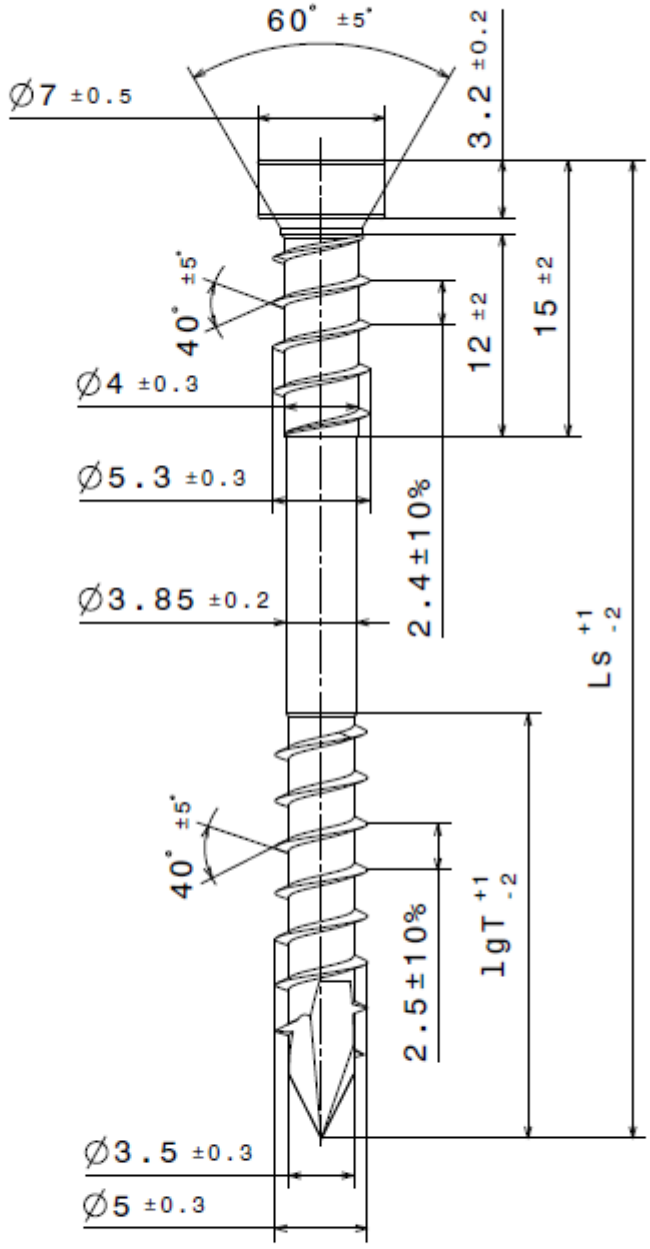

alternatively
with 4CUT-point

Cross section A-B
4CUT-point:
Square point
in core

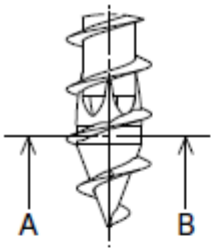

83	36
73	31
63	26
53	21
43	21
Ls	lgT*

*other thread lengths (lgT)
are acceptable if
lgT > 4 x Ø5,0

T-STAR plus T25

Annex A62

SPAX®

Self-tapping cylindric head screw with fixing thread

Material: cold rolled wire according to SPAX - Factory Standard
Stainless steel screw

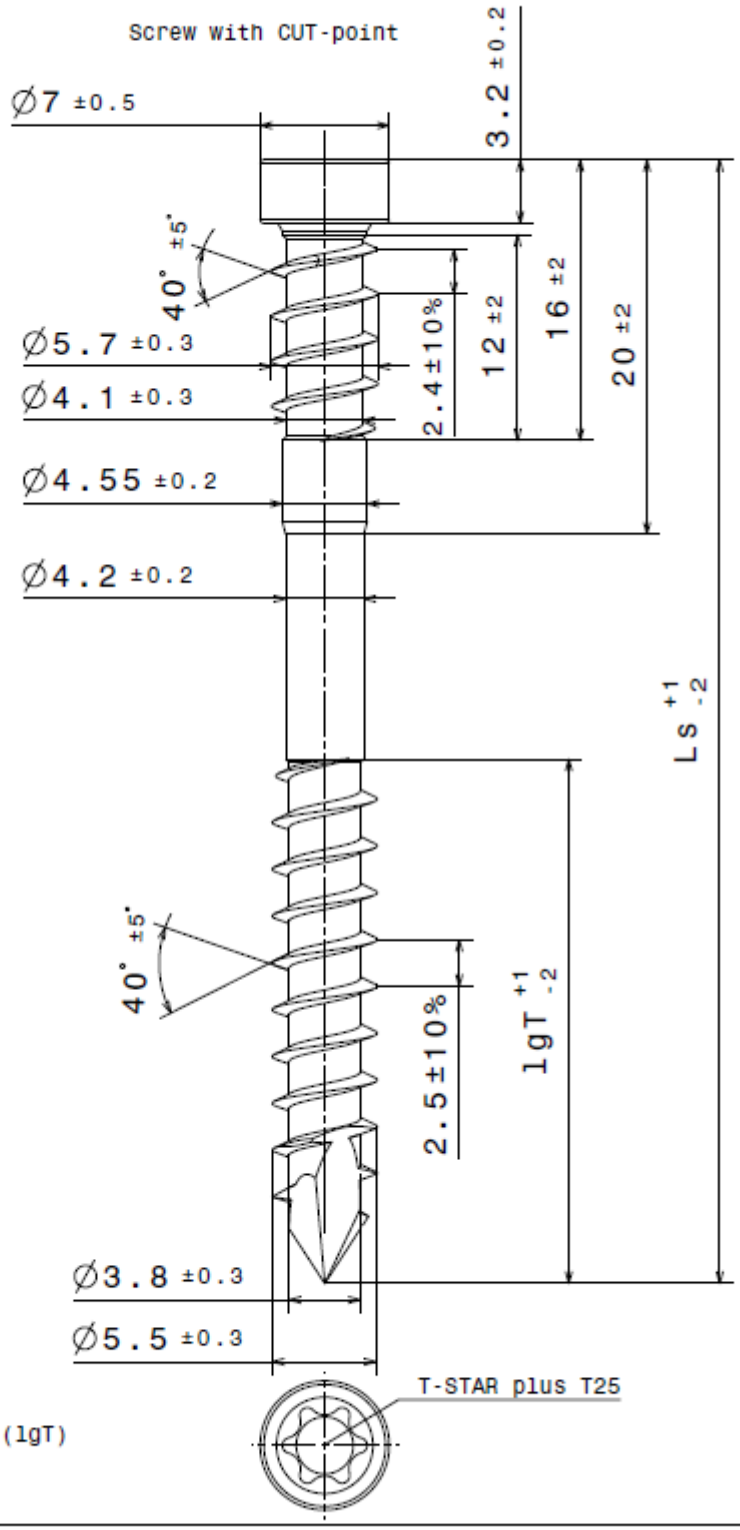

83	38
73	32
63	26
53	22
43	22
Ls	lgT*

*other thread lengths (lgT)
are acceptable if
lgT > 4 x Ø5,5

Annex A63

SPAX®

Self-tapping screw with fixing head

Material: cold rolled wire according to SPAX - Factory Standard
Stainless steel screw

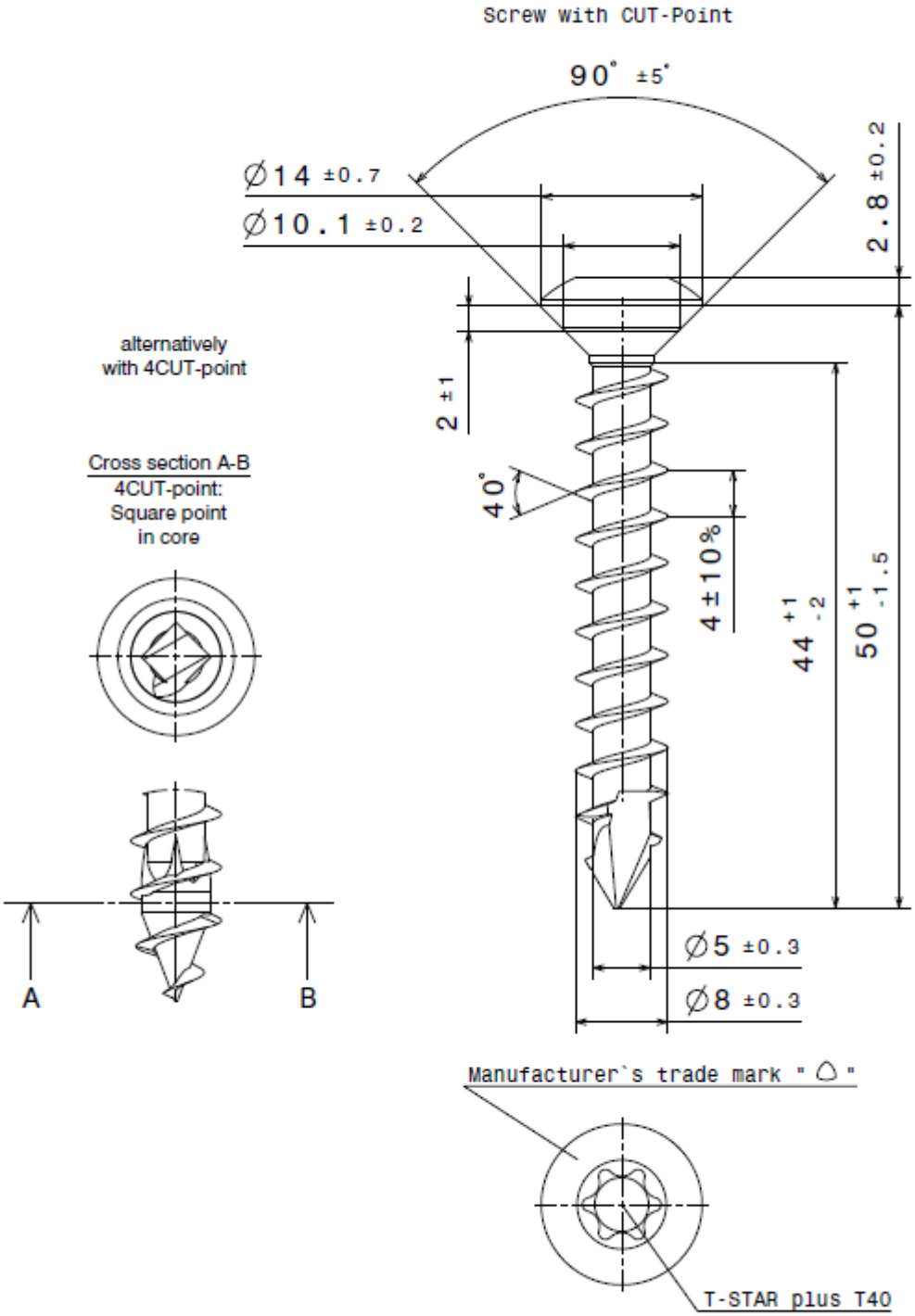

Annex A64

SPAX®

Self-tapping cylindric head screw with fixing thread

Material: cold rolled wire according to SPAX - Factory Standard
Stainless steel screw

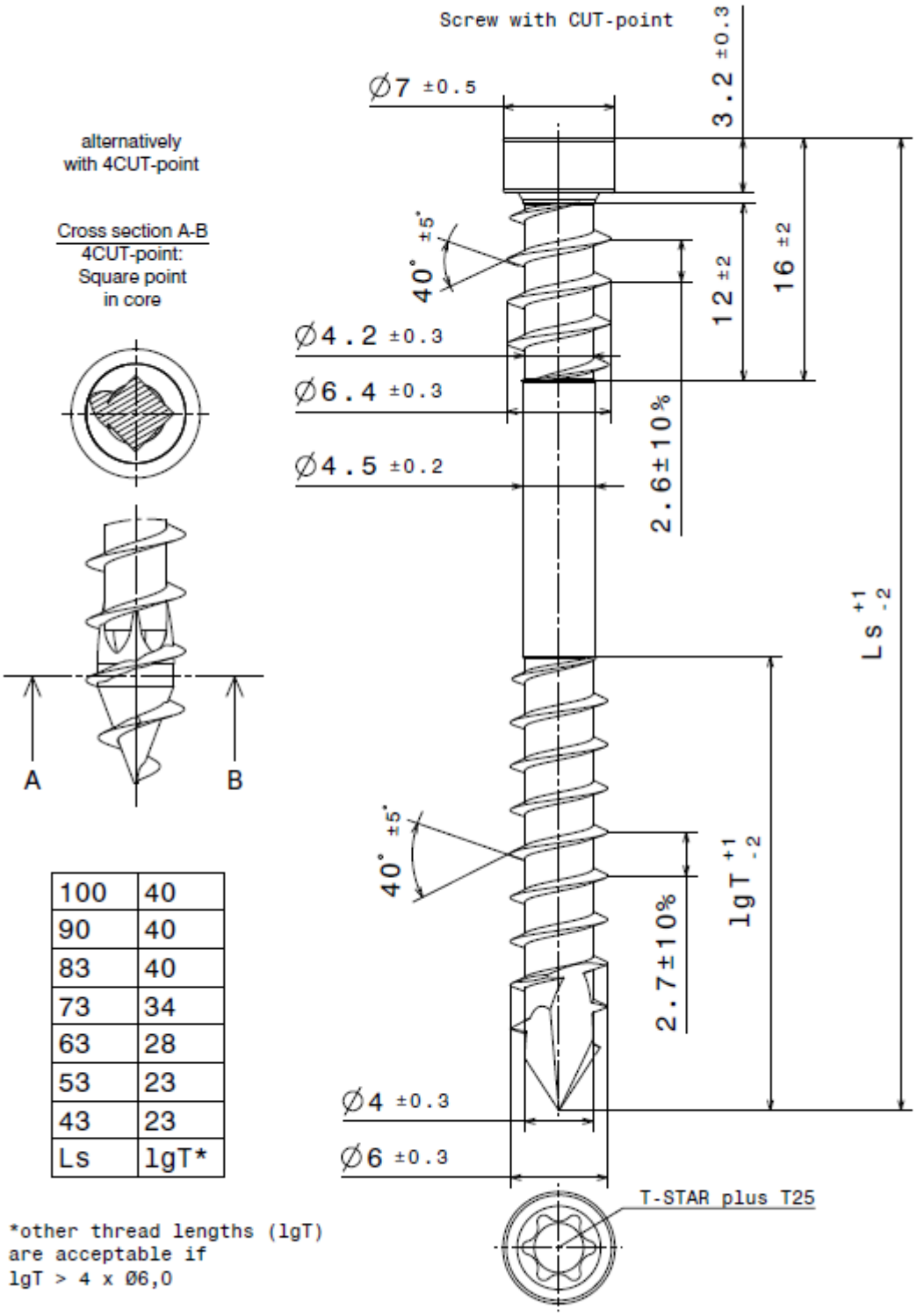

100	40
90	40
83	40
73	34
63	28
53	23
43	23
Ls	lgT*

*other thread lengths (lgT)
are acceptable if
lgT > 4 x Ø6,0

Annex A65

SPAX®	Self-tapping special washer head head screw with fixing thread
	Material: cold rolled wire according to SPAX - Factory Standard Stainless steel screw

Cross section A-B
4CUT-point:
square point
in core

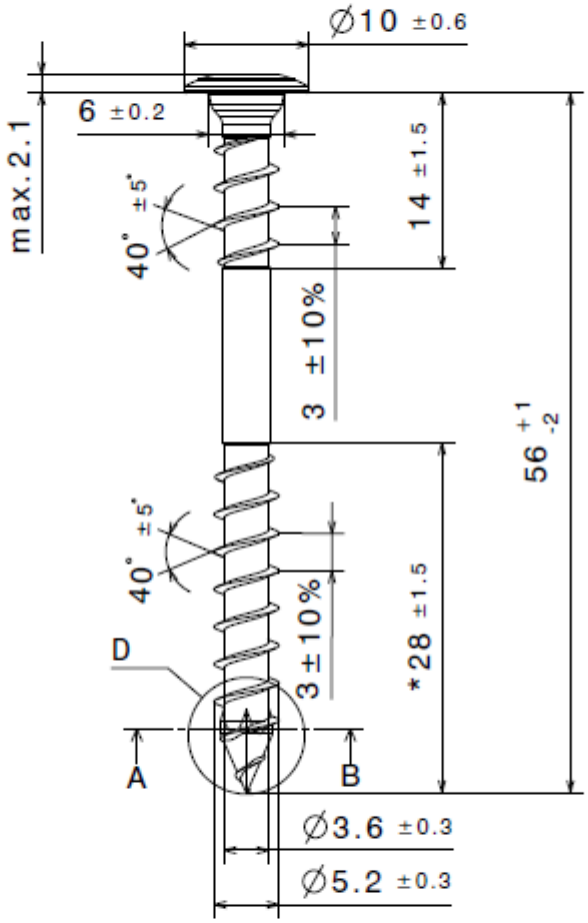

D: alternatively
with CUT-point

D: 4CUT point

T-STAR plus T20
Manufacturer's
trade mark "SPAX"

* other thread lengths (lgT)
are accepable if
lgT >4 x Ø5,0

Annex A66

SPAX®

Special washer head

Self-tapping screw with full and partial thread

Material: cold rolled wire according to SPAX - Factory Standard

Screws of high carbon steel

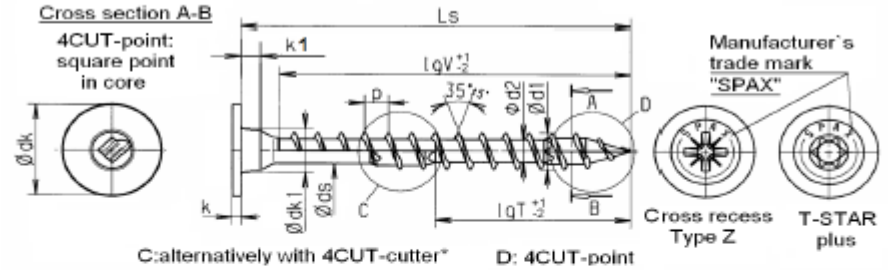

Nominal diameter		3,5		4,0		4,5		5,0		6,0		8,0		10,0	
d1	thread size	3,5		4,0		4,5		5,0		6,0		8,1		10,0	
	permissible tolerance	±0,3										±0,4		±0,5	
dk	head diameter	8,7	7,0	10,0	8,0	10,6	8,8	11,6	9,7	13,6	11,6	20,0	15,1	25,0	18,6
	permissible tolerance	±0,6								±0,65	±0,5	±1,0	±0,75	±1,25	±0,9
dk1	diameter	5,1		5,2		5,7		6,6		7,7		9,6		13,5	
	permissible tolerance	±0,3										±0,4			
d2	core diameter	2,25		2,6		2,9		3,2		3,9		5,0		6,1	
	permissible tolerance	+0,1/-0,3		±0,3											
ds	shank diameter	2,45		2,85		3,20		3,55		4,30		5,70		6,80	
	permissible tolerance	±0,10										±0,25			
k	head height max.	1,0		1,3		1,5		1,5		2,0		2,5		3,0	
k1	head height	1,3		1,5		1,5		1,5		1,8		2,5		2,5	
	permissible tolerance	±0,3										±0,5			
p	thread pitch	2,1		2,3		2,7		3,0		3,6		4,8		6,0	
	permissible tolerance	±0,1 x p													

T-STAR plus size			T20								T30		T40		T50	
Cross recess size Type Z			2								3					
Ls			Standard thread lengths (full thread = lgV / partial thread = lgT)													
Nom.dim.	min	max	lgV	lgT	lgV	lgT	lgV	lgT	lgV	lgT	lgV	lgT	lgV	lgT	lgV	lgT
17	15,5	17,5	14,0													
20	18,5	20,5	16,0		16,0											
25	***23,5***	***25,5***	***21,0***	***18,0***	***21,0***		***20,0***		***20,0***							
30	28,5	30,5	27,0	18,0	27,0	18,0	25,0		25,0		24,0					
35	***33,5***	***36,0***	***32,0***	***23,0***	***30,0***	***23,0***	***30,0***		***30,0***		***29,0***					
40	38,5	41,0	37,0	23,0	35,0	23,0	34,0	20,0	35,0	20,0	34,0		32,0			
45	***43,5***	***46,0***	***40,0***	***30,0***	***40,0***	***30,0***	***39,0***	***22,5***	***39,0***	***22,0***	***38,0***		***37,0***			
50	48,5	51,0	40,0	32,0	45,0	32,5	44,0	25,0	44,0	25,0	43,0	24,0	42,0		40,0	
55	***53,5***	***56,0***		***35,0***	***50,0***	***35,0***	***49,0***	***27,5***	***49,0***	***27,0***	***48,0***	***27,0***	***47,0***		***45,0***	
60	58,5	61,0		35,0	50,0	35,0	54,0	30,0	54,0	30,0	53,0	29,0	52,0		50,0	
65	***63,5***	***66,0***		***40,0***	***50,0***	***37,5***	***59,0***	***32,5***	***59,0***	***32,0***	***58,0***	***32,0***	***57,0***	***32,0***	***55,0***	
70	68,5	71,0			50,0	37,5	59,0	34,0	61,0	35,0	61,0	34,0	61,0	32,0	60,0	
75	***73,5***	***76,0***			***50,0***	***37,5***	***59,0***	***37,0***	***61,0***	***37,0***	***61,0***	***37,0***	***61,0***	***37,0***	***60,0***	
80	78,5	81,0			50,0	37,5	59,0	39,0	61,0	39,0	61,0	38,0	70,0	39,0	70,0	
90	***88,5***	***91,5***					***59,0***	***44,0***		***44,0***	***61,0***	***43,0***	***80,0***	***39,0***	***80,0***	
100	98,5	101,5						49,0		49,0	61,0	48,0	80,0	47,0	80,0	50,0
110	***108,5***	***111,5***						***54,0***		***54,0***	***68,0****	***53,0***	***80,0***	***47,0***	***80,0***	***50,0***
120	118,5	121,5								59,0	68,0*	56,0	80,0	57,0	80,0	60,0
130	***128,0***	***132,0***									***68,0****	***61,0***	***80,0***	***61,0***	***80,0***	***60,0***
140	138,0	142,0										68,0*		70,0		70,0
150	***148,0***	***152,0***										***68,0****		***70,0***		***70,0***
to																
160	158,0	162,0										68,0*		80,0		80,0
600	597,0	602,0												80,0		80,0

Screws of Ø6,0mm with partial thread additionally in lengths of 180 to 300 mm, in steps of 20 mm, LgT= 68,0 mm*

Intermediate lengths on Ls possible

=Preferred size

Other thread lengths in the range ≥4xd1 to max. standard length permitted.

* Design C with lgT= max. 65,0 mm

Annex A67

SPAX®-S

Special Washer Head

Self-tapping screw with parrtial thread

Material: Cold rolled wire according to SPAX - Factory Standard

Screws of high-carbon steel

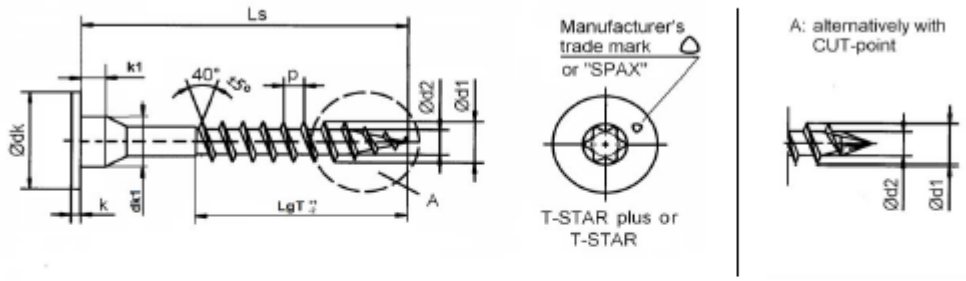

Nominal diameter			**12,0**	
Type of Head			**Special Washer head**	
d1	thread size		12,0	
	permissible tolerance		±0,30	
dk	head diameter	18,6	25,0	29,0
	permissible tolerance	±0,93	±1,25	±1,45
dk1	diameter		13,5	
	permissible tolerance		±0,6	
d2	core diameter		7,35	
	permissible tolerance		±0,35	
k	head height max.		4,0	
k1	head height		2,5	
	permissible tolerance		±0,5	
p	thread pitch		6,0	
	permissible tolerance		±0,1 x p	
T - STAR plus	size		T50	
Ls			Standard thread lengths partial thread = lgT)	
Nom.dim.	min	max	lgT	
80	78,5	81,5	50,0	
90	***88,5***	***91,5***	***55,0***	
100	98,5	101,5	60,0	
110	***108,5***	***111,5***	***80,0***	
120	118,5	121,5	80,0	
130	***128,0***	***132,0***	***80,0***	
140	138,0	142,0	80,0	
150	***148,0***	***152,0***	***100,0***	
160	158,0	162,0	100,0	
180	***178,0***	***182,0***	***100,0***	
200	198,0	202,0	100,0	
to				
600	***597,0***	***602,0***	***100,0***	

Screw lengths Ls to 600 mm possible

Other thread lenghts in the range ≥4xd1 to max. standard lenght permitted

Annex A68

SPAX®

Special Washer head

Self-tapping screw with full and partial thread

Material: cold rolled wire according to SPAX - Factory Standard

Stainless steel screw

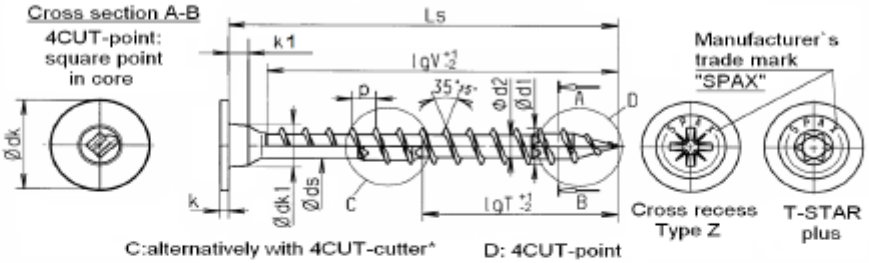

Nominal diameter		3,5		4,0		4,5		5,0		6,0		8,0		10,0	
d1	thread size	3,5		4,0		4,5		5,0		6,0		8,1		10,0	
	permissible tolerance	±0,3										±0,4		±0,5	
dk	head diameter	8,7	7,0	10,0	8,0	10,6	8,8	11,6	9,7	13,6	11,6	20,0	15,1	25,0	18,6
	permissible tolerance	±0,6								±0,65	±0,6	±1,0	±0,75	±1,25	±0,9
dk1	diameter	5,1		5,2		5,7		6,6		7,7		9,6		13,5	
	permissible tolerance	±0,3								±0,4					
d2	core diameter	2,45		2,75		3,1		3,4		3,9		5,3		6,1	
	permissible tolerance	+0,1/-0,3		±0,3											
ds	shank diameter	2,60		3,1		3,30		3,75		4,30		5,70		6,80	
	permissible tolerance	±0,1										±0,25			
k	head height max.	1,0		1,3		1,5		1,5		2,0		2,5		3,0	
k1	head height	1,3		1,5		1,5		1,5		1,8		2,5		2,5	
	permissible tolerance	±0,3										±0,5			
p	thread pitch	2,1		2,3		2,7		3,0		3,6		4,8		6,0	
	permissible tolerance	±0,1 x p													

T-STAR plus size			T20								T30		T40		T50	
Cross recess size Type Z			2								3					
Ls			Standard thread lengths (full thread = lgV / partial thread = lgT)													
Nom.dim	min	max	lgV	lgT	lgV	lgT	lgV	lgT	lgV	lgT	lgV	lgT	lgV	lgT	lgV	lgT
17	15,5	17,5	***14,0***													
20	18,5	20,5	16,0		16,0											
25	***23,5***	***25,5***	***21,0***	***18,0***	***21,0***		***20,0***		***20,0***							
30	28,5	30,5	27,0	18,0	27,0	18,0	25,0		25,0		24,0					
35	***33,5***	***36,0***	***32,0***	***23,0***	***30,0***	***23,0***	***30,0***		***30,0***		***29,0***					
40	38,5	41,0	37,0	23,0	35,0	23,0	34,0	20,0	35,0	20,0	34,0		32,0			
45	***43,5***	***46,0***	***40,0***	***30,0***	***40,0***	***30,0***	***39,0***	***22,5***	***39,0***	***22,0***	***38,0***		***37,0***			
50	48,5	51,0	40,0	32,0	45,0	23,5	44,0	25,0	44,0	25,0	43,0	24,0	42,0		40,0	
55	***53,5***	***56,0***		***35,0***	***50,0***	***35,0***	***49,0***	***27,5***	***49,0***	***27,0***	***48,0***	***27,0***	***47,0***		***45,0***	
60	58,5	61,0		35,0	50,0	35,0	54,0	30,0	54,0	30,0	53,0	29,0	52,0		50,0	
65	***63,5***	***66,0***		***40,0***	***50,0***	***37,5***	***59,0***	***32,5***	***59,0***	***32,0***	***58,0***	***32,0***	***57,0***	***32,0***	***55,0***	
70	68,5	71,0			50,0	37,5	59,0	34,0	61,0	35,0	61,0	34,0	61,0	32,0	60,0	
75	***73,5***	***76,0***			***50,0***	***37,5***	***59,0***	***37,0***	***61,0***	***37,0***	***61,0***	***37,0***	***61,0***	***37,0***	***60,0***	
80	78,5	81,0			50,0	37,5	59,0	39,0	61,0	39,0	61,0	38,0	70,0	39,0	70,0	
90	***88,5***	***91,5***					***59,0***	***44,0***		***44,0***	***61,0***	***43,0***	***80,0***	***39,0***	***80,0***	
100	98,5	101,5						49,0		49,0	61,0	48,0	80,0	47,0	80,0	50,0
110	***108,5***	***111,5***						***54,0***		***54,0***	***68,0****	***53,0***	***80,0***	***47,0***	***80,0***	***50,0***
120	118,5	121,5								59,0	68,0*	56,0	80,0	57,0	80,0	60,0
130	***128,0***	***132,0***									***68,0****	***61,0***	***80,0***	***61,0***	***80,0***	***60,0***
140	138,0	142,0										68,0*		70,0		70,0
150	***148,0***	***152,0***										***68,0****		***70,0***		***70,0***
to																
160	158,0	162,0										68,0*		80,0		80,0
600	597,0	602,0												80,0		80,0

Screws of Ø6,0mm with partial thread additionally in lengths of 180 to 300 mm, in steps of 20 mm, LgT= 68,0 mm*
Intermediate lengths on Ls possible

Other thread lengths in the range ≥4xd1 to max. standard length permitted.
* Design C with lgT= max. 65,0 mm

=Preferred size

Annex A69

	SPAX®-S Special Washer Head	Self-tapping screw with parrtial thread Material: Cold rolled wire according to SPAX - Factory Standard Stainless steel screw

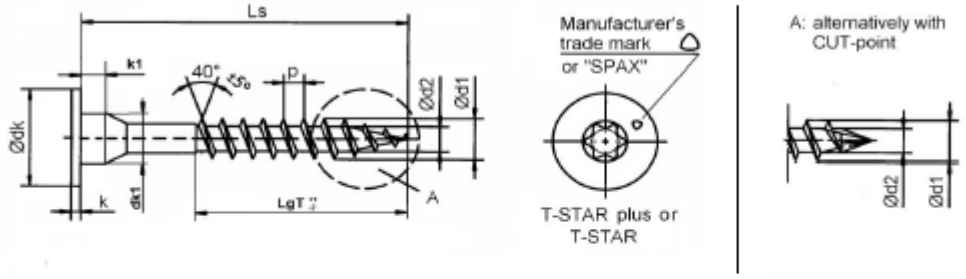

Nominal diameter		**12,0**		
Type of Head		**Special Washer head**		
d1	thread size	12,0		
	permissible tolerance	±0,60		
dk	head diameter	18,6	25,0	29,0
	permissible tolerance	±0,93	±1,25	±1,45
dk1	diameter	13,5		
	permissible tolerance	±0,6		
d2	core diameter	7,35		
	permissible tolerance	±0,35		
k	head height max.	4,0		
k1	head height	2,5		
	permissible tolerance	±0,5		
p	thread pitch	6,0		
	permissible tolerance	±0,1 x p		
T - STAR plus	size	T50		

Ls Nom.dim.	min	max	Standard thread lengths partial thread = lgT) lgT
80	78,5	81,5	50,0
90	***88,5***	***91,5***	***55,0***
100	98,5	101,5	60,0
110	***108,5***	***111,5***	***80,0***
120	118,5	121,5	80,0
130	***128,0***	***132,0***	***80,0***
140	138,0	142,0	80,0
150	***148,0***	***152,0***	***100,0***
160	158,0	162,0	100,0
180	***178,0***	***182,0***	***100,0***
200	198,0	202,0	100,0
to			
600	***597,0***	***602,0***	***100,0***

Screw lengths Ls to 600 mm possible
Other thread lenghts in the range ≥4xd1 to max. standard lenght permitted

Annex A70

SPAX®

Countersunk with head hole

Self-tapping screw with full and partial thread

Material: cold rolled wire according to SPAX - Factory Standard

Screws of high carbon steel

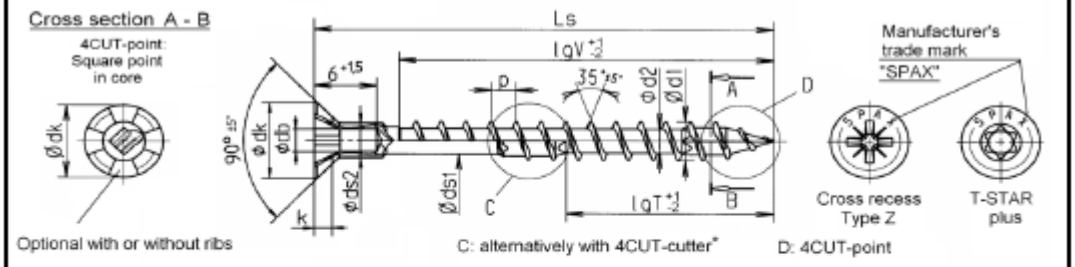

Nominal diameter				4,0	4,5	5,0	6,0
d1	thread size			4,0	4,5	5,0	6,0
	permissible tolerance			±0,3			
dk	head diameter			8,0	8,8	9,6	11,6
	permissible tolerance			±0,5	±0,6		
db	hole diameter			2,50			
	permissible tolerance			± 0,15			
d2	core diameter			2,6	2,9	3,2	3,9
	permissible tolerance			±0,3			
ds1	shank diameter			2,85	3,20	3,55	4,30
	permissible tolerance			±0,10			
ds2	shank diameter			3,60	3,80	4,10	ohne
	permissible tolerance			±0,10		±0,2	
k	head height max.			2,4	2,7	2,9	3,4
p	thread pitch			2,4	2,7	3,0	3,6
	permissible tolerance			±0,1 x p			
T-STAR plus size				T20			T30
Cross reecess size Type Z				2			3

Ls			Standard thread lengths (full thread = lgV / partial thread = lgT)											
Nom.dim.	min	max					lgV	lgT	lgV	lgT	lgV	lgT	lgV	lgT
20	18,5	20,5					16,0							
25	***23,5***	***25,5***					***21,0***		***20,0***		***20,0***			
30	28,5	30,5					25,0	18,0	25,0		25,0		24,0	
35	***33,5***	***36,0***					***30,0***	***23,0***	***30,0***	***25,0***	***30,0***	***25,0***	***29,0***	***24,0***
40	38,5	41,0					35,0	23,0	34,0	25,0	35,0	27,0	34,0	24,0
45	***43,5***	***46,0***					***40,0***	***30,0***	***39,0***	***30,0***	***39,0***	***30,0***	***38,0***	***29,0***
50	48,5	51,0					45,0	32,5	44,0	32,5	44,0	32,0	43,0	32,0
55	***53,5***	***56,0***					***50,0***	***35,0***	***49,0***	***37,0***	***49,0***	***37,0***	***48,0***	***37,0***
60	58,5	61,0					50,0	35,0	54,0	37,0	54,0	37,0	53,0	37,0
65	***63,5***	***66,0***					***50,0***	***37,5***	***59,0***	***42,0***	***59,0***	***41,0***	***58,0***	***41,0***
70	68,5	71,0					50,0	37,5	59,0	42,0	61,0	41,0	61,0	41,0
75	***73,5***	***76,0***					***50,0***	***37,5***	***59,0***	***42,0***	***61,0***	***41,0***	***61,0***	***41,0***
80	78,5	81,0					50,0	37,5	59,0	47,0	61,0	46,0	61,0	46,0
90	***88,5***	***91,5***							***59,0***	***47,0***		***61,0***		***61,0***
100	98,5	101,5										61,0		61,0
110	***108,5***	***111,5***										***69,0****		***68,0****
120	118,5	121,5										69,0*		68,0*
130	***128,0***	***132,0***												***68,0****
140	138,0	142,0												68,0*
150	***148,0***	***152,0***												***68,0****
160	158,0	162,0												68,0*

Screws of Ø6,0 mm with partial thread additionally in lengths of 180 to 300 mm, in steps of 20 mm, LgT= 68,0 mm*

Intermediate lengths on Ls possible

Other thread lengths in the range ≥4xd1 to max. standard length permitted.

* Design C with lgT= max. 65,0 mm

Annex A71

SPAX®

Self-tapping flat countersunk head screw with adjusting thread

Material: cold rolled wire according to SPAX - Factory Standard
Screws of high carbon steel

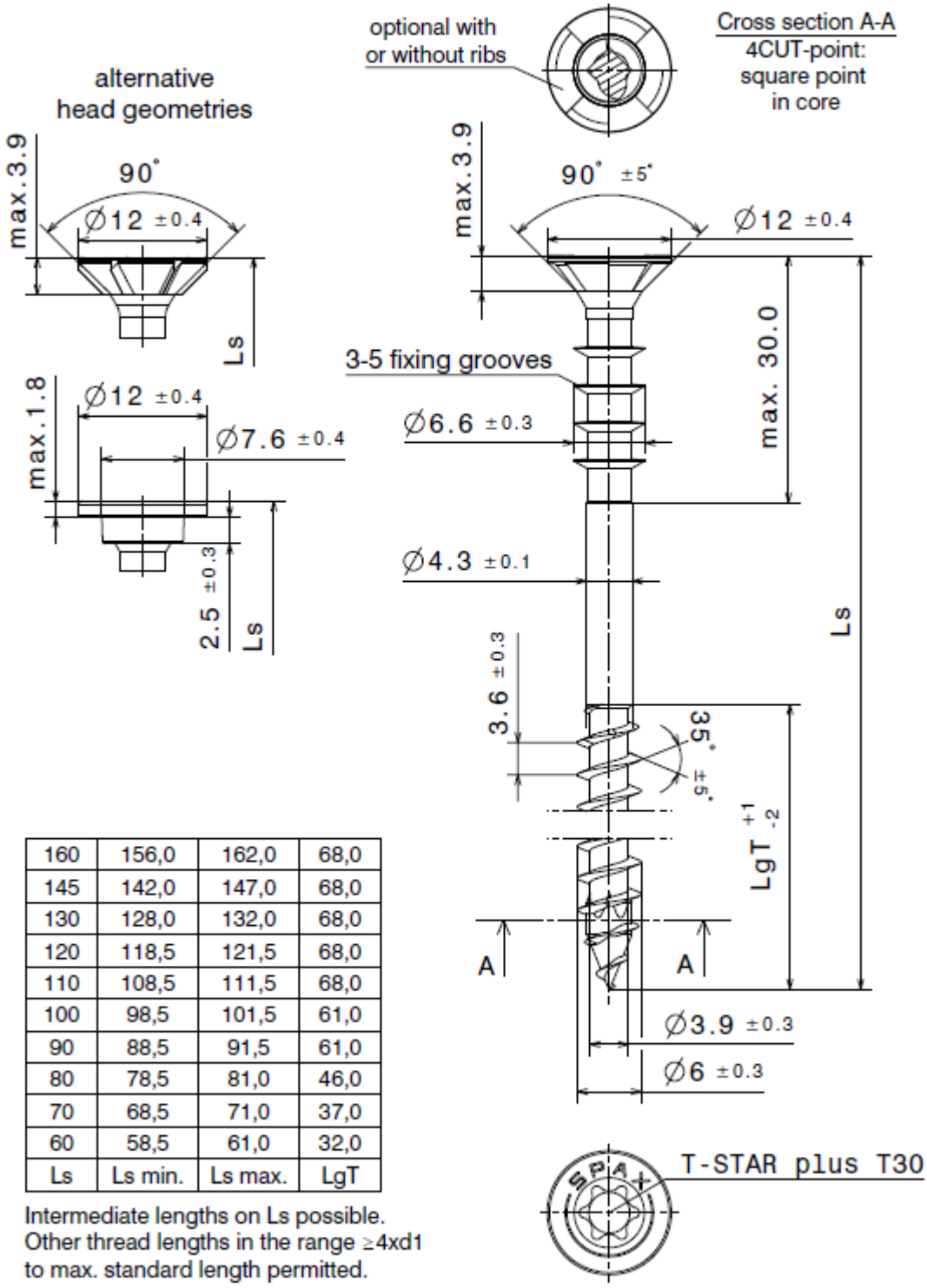

160	156,0	162,0	68,0
145	142,0	147,0	68,0
130	128,0	132,0	68,0
120	118,5	121,5	68,0
110	108,5	111,5	68,0
100	98,5	101,5	61,0
90	88,5	91,5	61,0
80	78,5	81,0	46,0
70	68,5	71,0	37,0
60	58,5	61,0	32,0
Ls	Ls min.	Ls max.	LgT

Intermediate lengths on Ls possible.
Other thread lengths in the range ≥4xd1
to max. standard length permitted.

Annex A72

SPAX®

Self-tapping flat countersunk head screw with fixing thread

Material: cold rolled wire according to SPAX - Factory Standard
Stainless steel screw

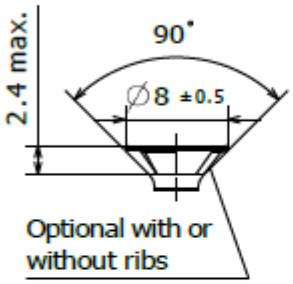

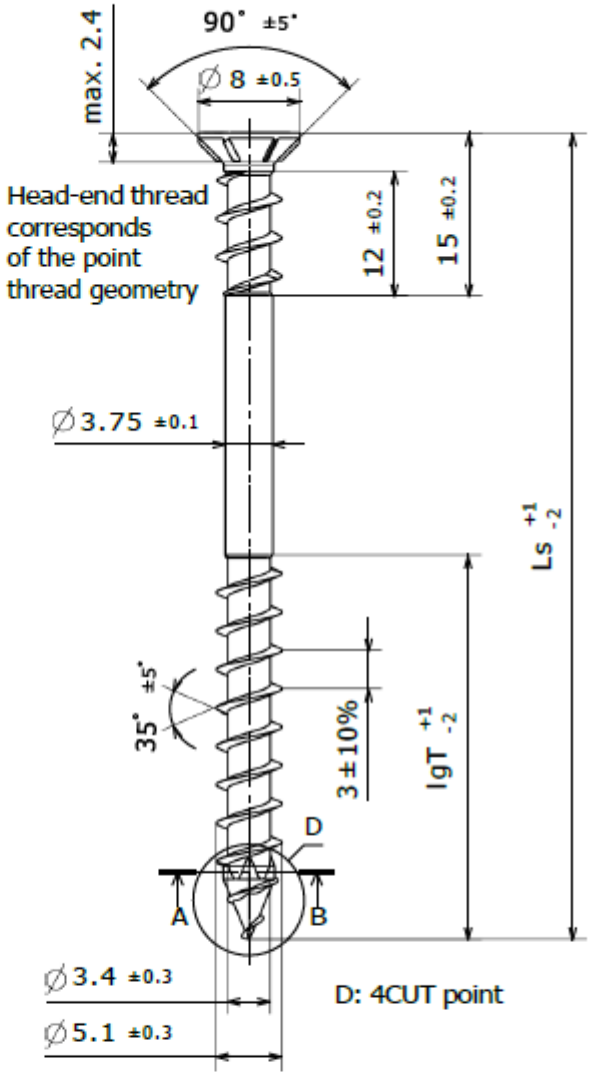

Cross section A-B

4CUT-point:
Square point
in core

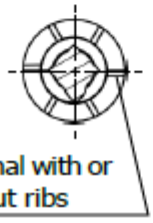

D: alternatively
with CUT-point

90	41
77	39
70	37
63	32
50	27
Ls	LgT*

*other thread lengths (lgT) are acceptable if LgT >4x Ø5

Manufacturer`s trade mark "SPAX"

T-STAR plus
T20

Annex A73

Annex B

Minimum distances and spacing

Minimum distances and spacing for exclusively axially loaded SPAX screws with CUT or 4CUT drill tip or with d ≤ 8 mm in non-predrilled holes in members of solid timber, glued laminated timber or similar glued products

Single configuration

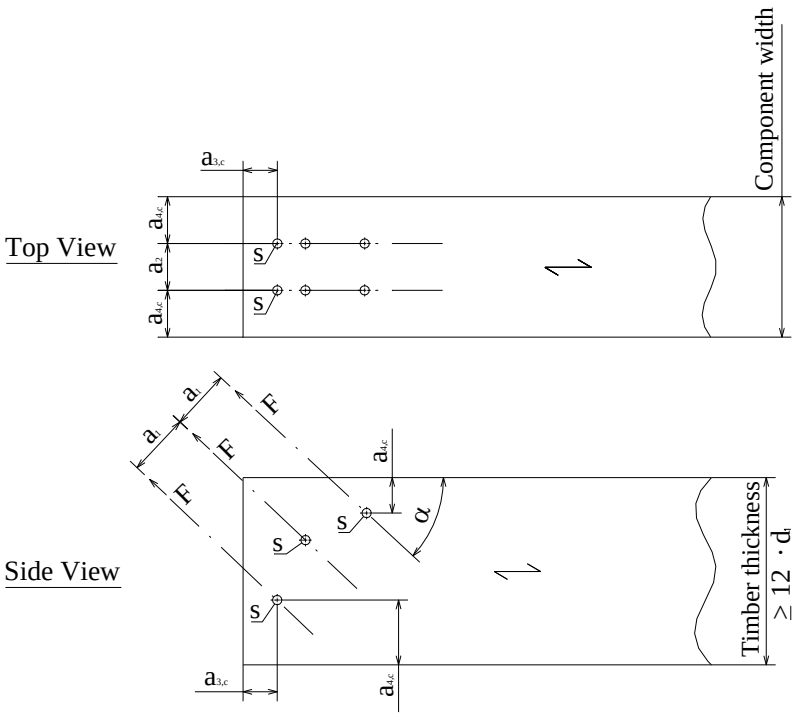

grain direction

screw axis

S centroid of the part of the screw in the timber

$15° \leq \alpha \leq 90°$

$a_1 \geq 5 \cdot d$

$a_2 \geq 2{,}5 \cdot d$

$a_{3,c} \geq 5 \cdot d$

$a_{4,c} \geq 4 \cdot d$

$\geq 3 \cdot d$ for screws with CUT or 4CUT drill tip

$a_1 \cdot a_2 \geq 25 \cdot d^2$

Minimum distances and spacing see also 3.11

Minimum timber thickness t = 12 · d for solid or glued laminated timber and t = 6 · d for laminated veneer lumber, see also 3.11

Minimum distances and spacing for exclusively axially loaded SPAX screws with CUT or 4CUT drill tip or with d ≤ 8 mm in non-predrilled holes in members of solid timber, glued laminated timber or similar glued products
Crosswise configuration

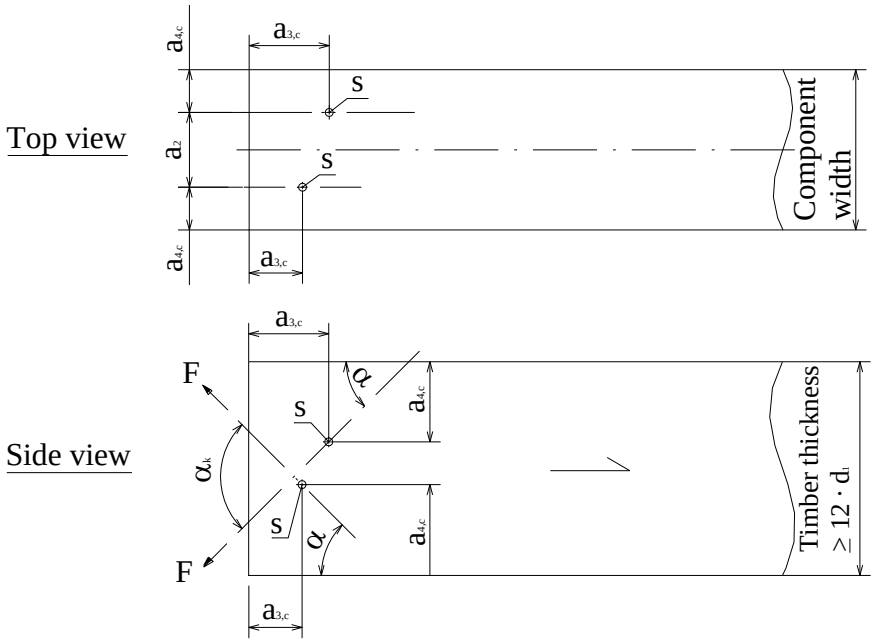

grain direction
screw axis
S centroid of the part of the screw in the timber
$15° \leq \alpha \leq 90°$

$a_1 \geq 5 \cdot d$
$a_2 \geq 1{,}5 \cdot d$ for $70° < \alpha_k \leq 90°$
$\geq 2{,}5 \cdot d \cdot (1 - \alpha_k / 180°)$ for $30° \leq \alpha_k \leq 70°$
$a_{3,c} \geq 5 \cdot d$
$a_{4,c} \geq 4 \cdot d$
$\geq 3 \cdot d$ for screws with CUT or 4CUT drill tip
$a_1 \cdot a_2 \geq 25 \cdot d^2$

Minimum distances and spacing see also 3.11
Minimum timber thickness t = 12 · d for solid or glued laminated timber and t = 6 · d for laminated veneer lumber, see also 3.11

Mechanically jointed beams

SPAX screws with a full thread or threaded rods may be used for connections in structural members which are composed of several parts in mechanically jointed beams or columns.

The axial slip modulus K_{ser} of a screw or threaded rod with a full thread for the serviceability limit state in the direction of the screw axis should be taken independent of angle α to the grain as:

$C = K_{ser} = 25 \cdot d \cdot \ell_{ef}$ [N/mm] for screws or threaded rods in softwood
$C = K_{ser} = 30 \cdot d \cdot \ell_{ef}$ [N/mm] for screws in pre-drilled hardwood

Where
d outer thread diameter [mm]
ℓ_{ef} penetration length in the respective structural member [mm], $\ell_{ef} = \ell_1$ or ℓ_2

Axially loaded SPAX screws or threaded rods in solid or glued laminated timber or laminated veneer lumber
Single configuration

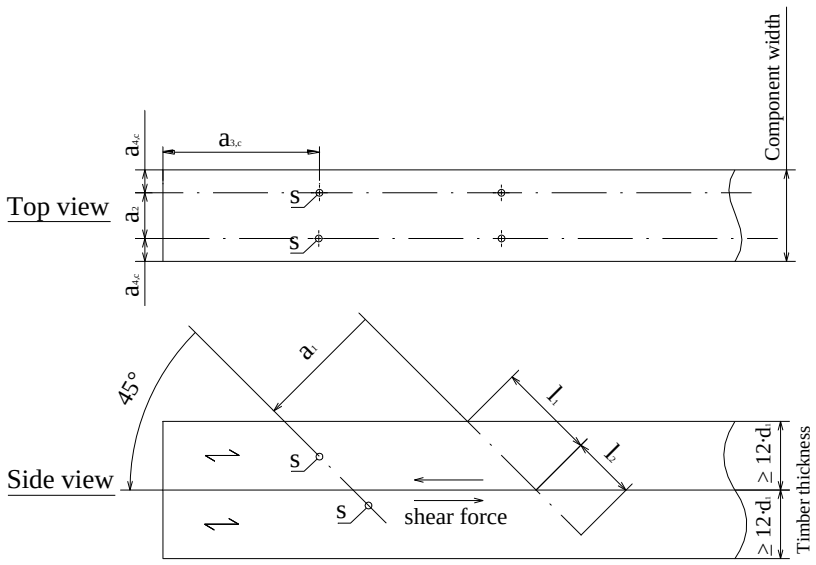

grain direction
screw axis
S centroid of the part of the screw in the timber

$a_1 \geq 5 \cdot d$
$a_2 \geq 2{,}5 \cdot d$
$a_{3,c} \geq 5 \cdot d$
$a_{4,c} \geq 4 \cdot d$
$\geq 3 \cdot d$ for screws with CUT or 4CUT drill tip
$a_1 \cdot a_2 \geq 25 \cdot d^2$

Minimum distances and spacing see also 3.11
Minimum timber thickness $t = 12 \cdot d$ for solid or glued laminated timber and $t = 6 \cdot d$ for laminated veneer lumber, see also 3.11

Axially loaded SPAX screws or threaded rods in solid or glued laminated timber or laminated veneer lumber
Crosswise configuration

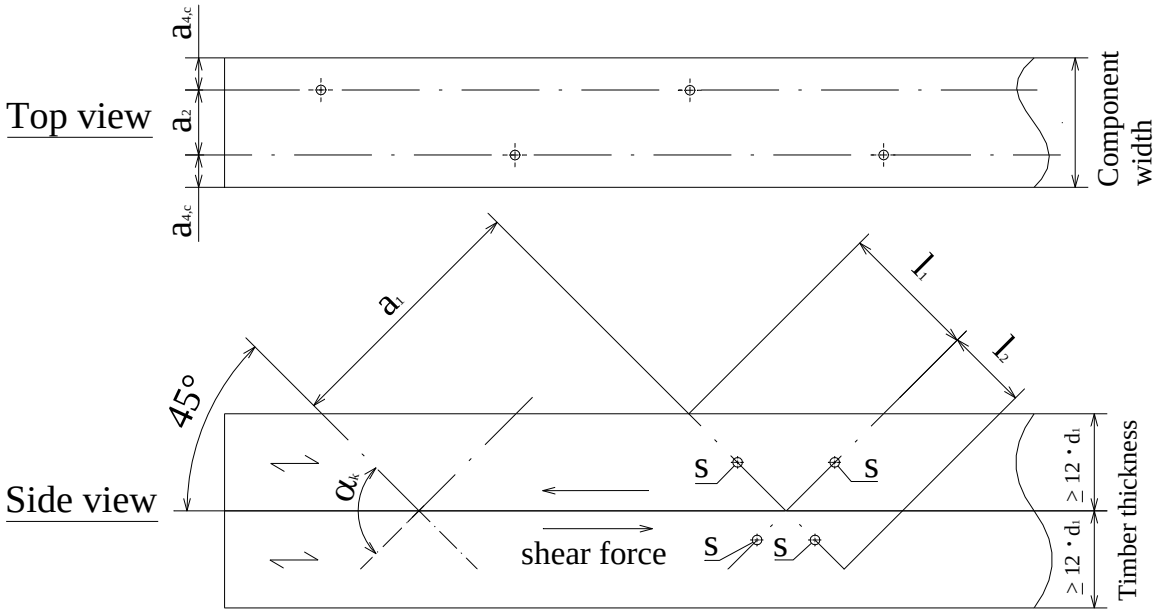

grain direction
screw axis
S centroid of the part of the screw in the timber

$a_1 \geq 5 \cdot d$
$a_2 \geq 2{,}5 \cdot d$ ($a_2 \geq 1{,}5 \cdot d$ between the crossing screws of a screw couple)
$a_{3,c} \geq 5 \cdot d$
$a_{4,c} \geq 4 \cdot d$
$\geq 3 \cdot d$ for screws with CUT or 4CUT drill tip
$a_1 \cdot a_2 \geq 25 \cdot d^2$

Minimum distances and spacing see also 3.11
Minimum timber thickness $t = 12 \cdot d$ for solid or glued laminated timber and $t = 6 \cdot d$ for laminated veneer lumber, see also 3.11

Axially or laterally loaded screws in the plane or edge surface of cross laminated timber

Definition of spacing, end and edge distances in the plane surface unless otherwise specified in the technical specification (ETA or hEN) for the cross laminated timber:

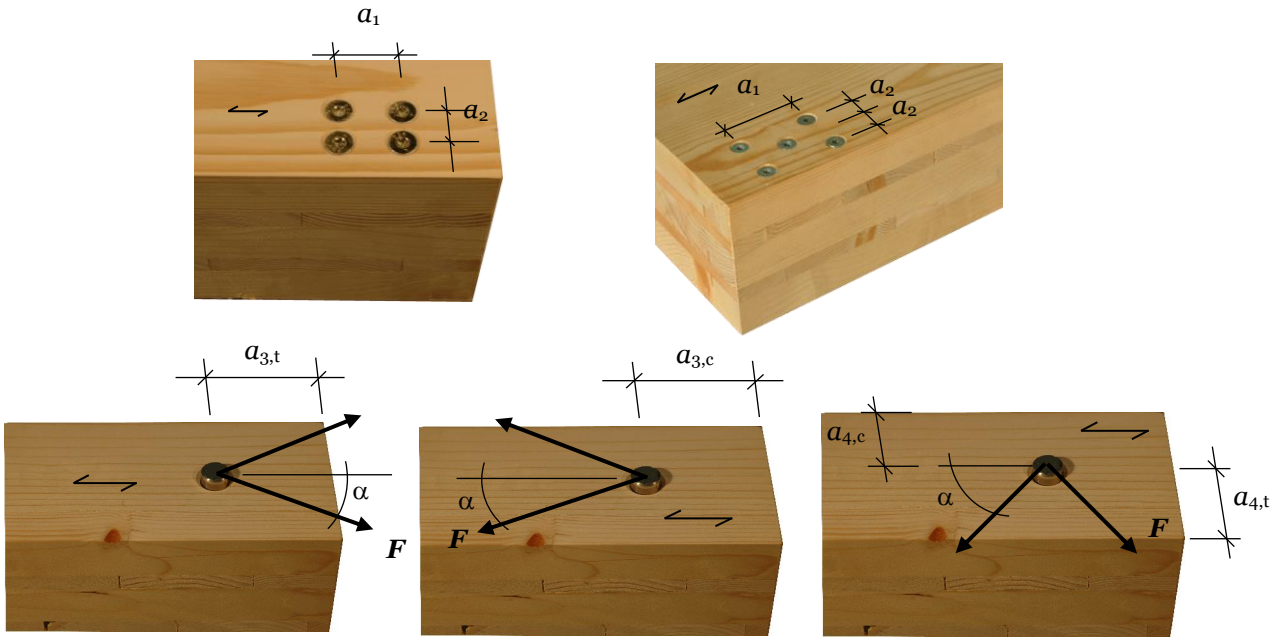

Definition of spacing, end and edge distances in the edge surface unless otherwise specified in the technical specification (ETA or hEN) for the cross laminated timber:

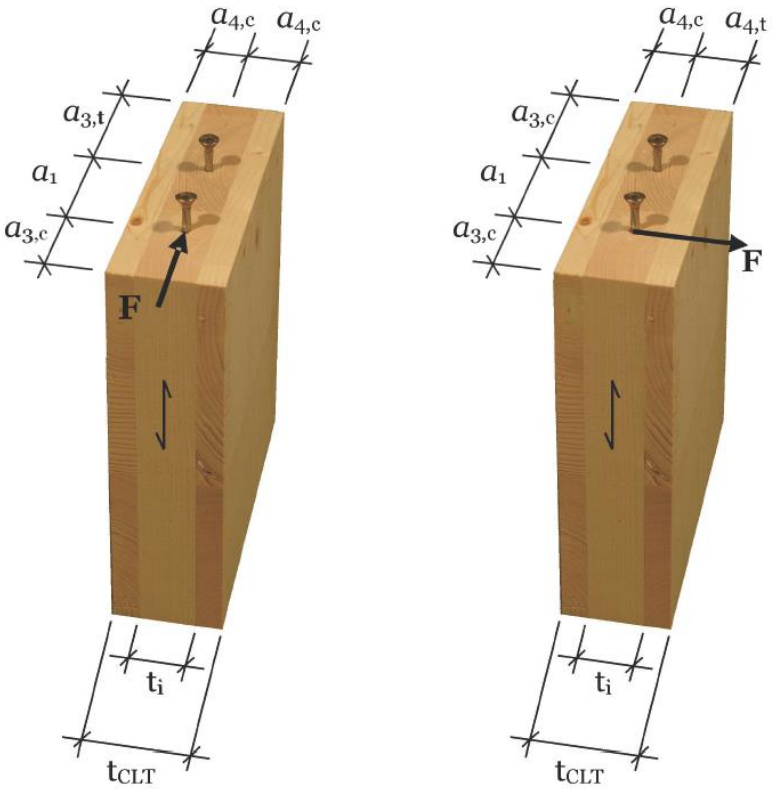

Annex C

Compression reinforcement

SPAX screws or threaded rods with a full thread may be used for reinforcement of timber members with compression stresses at an angle α to the grain of $45° \leq \alpha \leq 90°$. The compression force must be evenly distributed over all screws. An appropriate steel plate as intermediate layer between timber member and support has to be installed. The screws have to be driven into the timber member flush with the surface to provide both direct contact with the steel plate and direct contact between steel plate and timber.

The characteristic load-carrying capacity for a contact area with screws with a full thread at an angle α to the grain of $45° \leq \alpha \leq 90°$ shall be calculated from:

$$F_{90,Rd} = \min \begin{cases} k_{c,90} \cdot B \cdot \ell_{ef,1} \cdot f_{c,90,d} + n \cdot F_{ax,Rd} \\ B \cdot \ell_{ef,2} \cdot f_{c,90,d} \end{cases} \qquad \text{(C.1)}$$

Where

$F_{90,Rd}$ Design load-carrying capacity of reinforced contact area [N]
$k_{c,90}$ factor for compression perpendicular to the grain according to EN 1995-1-1
B bearing width [mm]
$\ell_{ef,1}$ effective length of contact area according to EN 1995-1-1 [mm]
$f_{c,90,d}$ design compressive strength perpendicular to the grain [N/mm²]
n number of reinforcement screws, $n = n_0 \cdot n_{90}$
n_0 number of reinforcement screws arranged in a row parallel to the grain
n_{90} number of reinforcement screws arranged in a row perpendicular to the grain
$F_{ax,Rd}$ Design compressive capacity [N], see page 7
$\ell_{ef,2}$ effective distribution length in the plane of the screw tips [mm]
$\ell_{ef,2}$ $= \ell_{ef} + (n_0 - 1) \cdot a_1 + \min(\ell_{ef}; a_{3,c})$
for end-bearings [mm]
$\ell_{ef,2}$ $= 2 \cdot \ell_{ef} + (n_0 - 1) \cdot a_1$ for centre-bearings [mm]
ℓ_{ef} point side penetration length [mm]
a_1 spacing parallel to the grain [mm]
$a_{3,c}$ end distance [mm]

If screws are driven into the member from top and bottom and the screws are overlapping at least 10·d, i.e. $\ell_{ef,top} + \ell_{ef,bottom} \geq H + 10 \cdot d$, the second condition in equation (C.1) may be disregarded.

Reinforcing screws or threaded rods for wood-based panels are not covered by this European Technical Assessment.

Reinforced centre-bearing

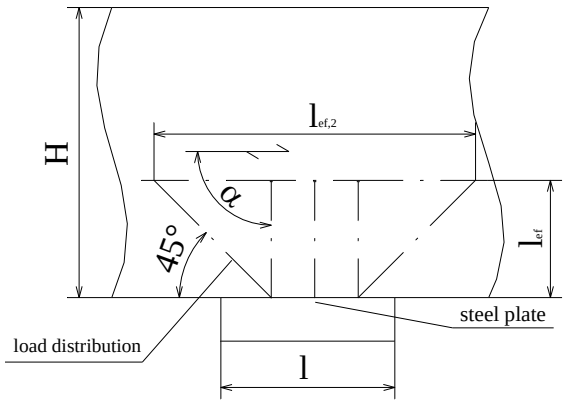

H component height [mm]
B bearing width [mm]
ℓ_{ef} point side penetration length [mm]
$\ell_{ef,2}$ effective distribution length in the plane of the screw tips [mm]
$= 2 \cdot \ell_{ef} + (n_0 - 1) \cdot a_1$ for centre-bearings

grain direction
screw axis
$45° \leq \alpha \leq 90°$

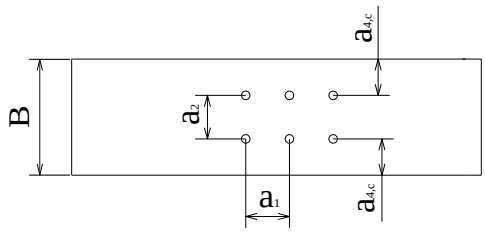

Reinforced end-bearing

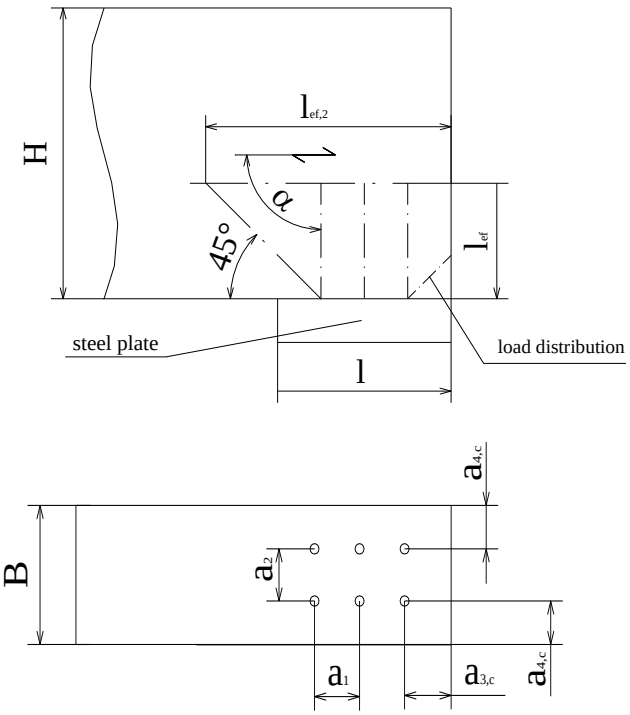

H component height [mm]
B bearing width [mm]
ℓ_{ef} point side penetration length [mm]
$\ell_{ef,2}$ effective distribution length in the plane of the screw tips [mm]
$= \ell_{ef} + (n_0 - 1) \cdot a_1 + \min(\ell_{ef}; a_{3,c})$ for end-bearings

grain direction
screw axis
$45° \leq \alpha \leq 90°$

$a_1 \geq 5 \cdot d$
$a_2 \geq 2{,}5 \cdot d$
$a_{3,c} \geq 5 \cdot d$
$a_{4,c} \geq 4 \cdot d$
$\geq 3 \cdot d$ for screws with CUT or 4CUT drill tip
$a_1 \cdot a_2 \geq 25 \cdot d^2$

The screw heads must be flush with the surface of the structural timber member.

Annex D
Tensile reinforcement perpendicular to grain

Unless specified otherwise in national provisions that apply at the installation site, the axial capacity of a reinforcement of a timber member loaded by a connection force perpendicular to the grain shall fulfil the following condition:

$$\frac{\left[1-3\cdot\alpha^2+2\cdot\alpha^3\right]\cdot F_{90,d}}{F_{ax,Rd}}\leq 1$$

Where

$F_{90,d}$ Design value of the force component perpendicular to the grain [N],

α = a/h

h = member depth [mm]

$F_{ax,Rd}$ Minimum of the design values of the withdrawal capacity and the tensile capacity of the reinforcing screws or threaded rods where ℓ_{ef} is the smaller value of the penetration depth below or above the potential crack

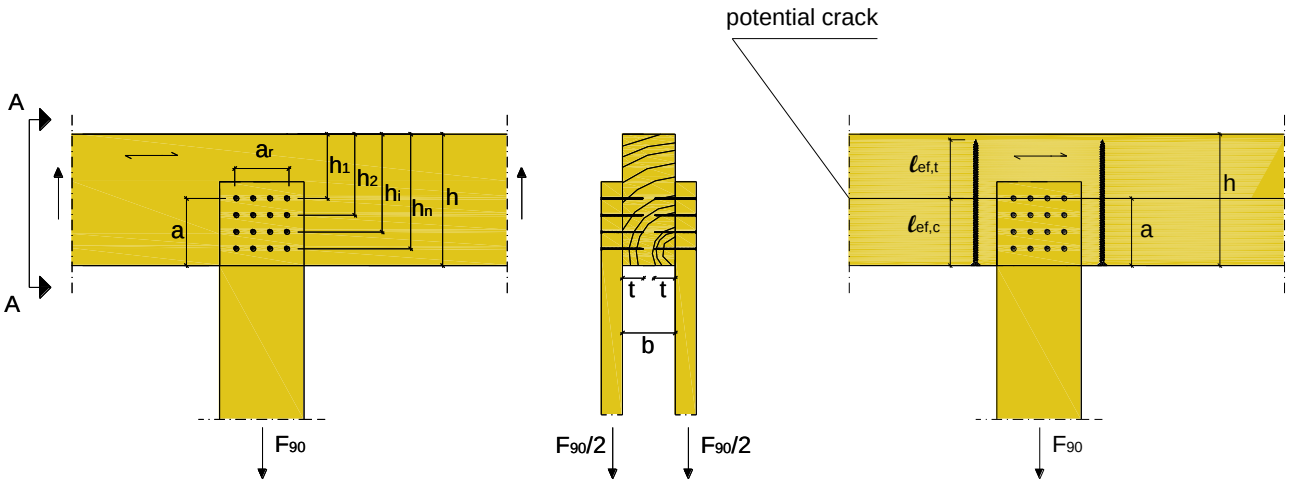

–

Unless specified otherwise in national provisions that apply at the installation site, the axial capacity of a reinforcement of a notched beam support shall fulfil the following condition:

$$\frac{1{,}3\cdot V_d\cdot\left[3\cdot(1-\alpha)^2-2\cdot(1-\alpha)^3\right]}{F_{ax,Rd}}\leq 1$$

Where

V_d Design value of the shear force [N],

α = h_e/h

h = member depth [mm]

$F_{ax,Rd}$ Minimum of the design values of the withdrawal capacity and the tensile capacity of the reinforcing screws or threaded rods where ℓ_{ef} is the smaller value of the penetration depth below or above the potential crack [N]

The minimum spacing a_2 of threaded rods used as reinforcement of a notched beam support is $a_2 = 3\cdot d$, the minimum end or edge distance is $a_{3,c} = 2{,}5\cdot d$ or $a_{4,c} = 2{,}5\cdot d$.

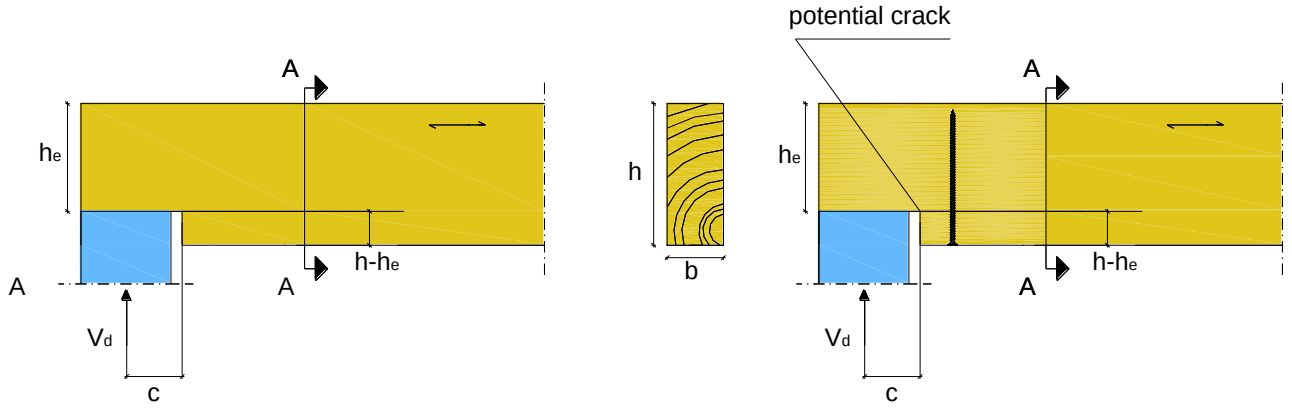

Unless specified otherwise in national provisions that apply at the installation site, the axial capacity of a reinforcement of a hole in a beam shall fulfil the following condition:

$$\frac{F_{t,V,d} + F_{t,M,d}}{F_{ax,Rd}} \leq 1$$

Where

$F_{t,V,d}$ Design value of the force perpendicular to the grain due to shear force [N]:

$$F_{t,V,d} = \frac{V_d \cdot h_d}{4 \cdot h} \cdot \left[3 - \frac{h_d^2}{h^2} \right]$$

V_d Design value of the member shear force at the hole end [N],
h = member depth [mm]
h_d = hole depth for rectangular holes [mm]
h_d = 70 % of hole diameter for circular holes [mm]
$F_{t,M,d}$ Design value of the force perpendicular to the grain due to bending moment [N]:

$$F_{t,M,d} = 0,008 \cdot \frac{M_d}{h_r}$$

M_d Design value of the member bending moment at the hole end [Nmm],
h_r = min (h_{ro} ; h_{ru}) for rectangular holes [mm]
h_r = min (h_{ro} ; h_{ru}) + 0,15·h_d for circular holes [mm]
$F_{ax,Rd}$ Minimum of the design values of the withdrawal capacity and the tensile capacity of the reinforcing screws or threaded rods where ℓ_{ef} is the smaller value of the penetration depth below or above the potential crack [N].

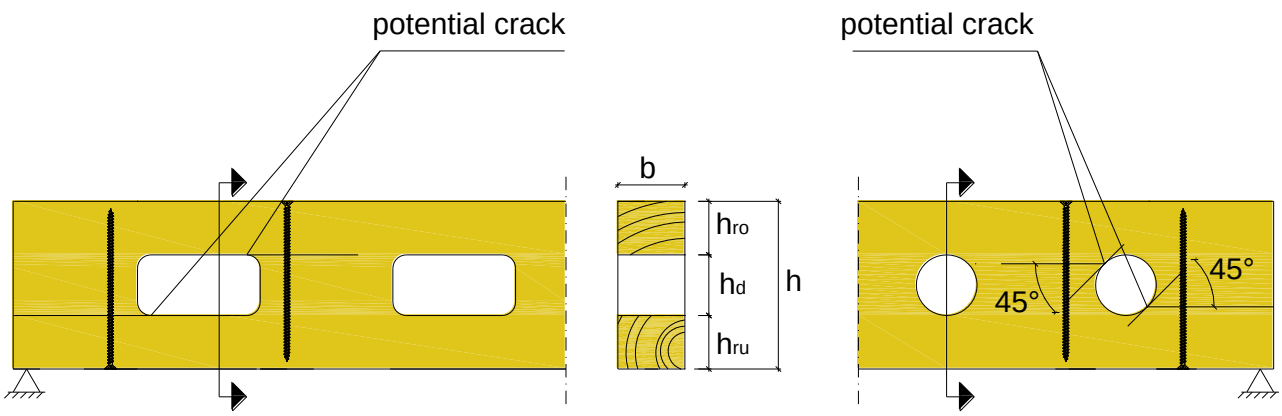

Apart from the reinforcement with screws, strength verification is required for the shear strength of the timber member in the vicinity of the hole.

Annex E
Shear reinforcement

Unless specified otherwise in national provisions that apply at the installation site, the shear stress in reinforced areas of timber members with a stress component parallel to the grain shall fulfil the following condition:

$$\tau_d \leq \frac{f_{v,d} \cdot k_\tau}{\eta_H}$$

Where:

τ_d is the design shear stress disregarding the reinforcement [N/mm²];

$f_{v,d}$ is the design shear strength [N/mm²];

$$k_\tau = 1 - 0{,}46 \cdot \sigma_{90,d} - 0{,}052 \cdot \sigma_{90,d}^2$$

$\sigma_{90,d}$ is the design stress perpendicular to the grain (negative value for compression) [N/mm²];

$$\sigma_{90,d} = \frac{F_{ax,d}}{\sqrt{2} \cdot b \cdot a_1}$$

$$F_{ax,d} = \frac{\sqrt{2} \cdot (1 - \eta_H) \cdot V_d \cdot a_1}{h} \text{ [N]}$$

$$\eta_H = \frac{G \cdot b}{G \cdot b + \dfrac{1}{2 \cdot \sqrt{2} \left(\dfrac{6}{\pi \cdot d \cdot h \cdot k_{ax}} + \dfrac{a_1}{EA_S} \right)}}$$

V_d is the design shear force [N];

G is the shear modulus of the timber member, G = 650 [N/mm²],

b is the width of the timber member [mm],

d is the outer thread diameter [mm],

h is the depth of the timber member [mm],

k_{ax} is the connection stiffness between rod or screw and timber member [N/mm³],
k_{ax} = 5 N/mm³ for threaded rods d = 16 mm, k_{ax} = 12,5 N/mm³ for self-tapping screws d = 8 mm,

a_1 is the spacing parallel to the grain of the rods or screws arranged in one row [mm], for n parallel rows, an effective spacing $a_{1,ef} = a_1/n$ may be used,

EA_S is the axial stiffness of one rod or screw [N],

$$EA_S = \frac{E \cdot \pi \cdot d_2^2}{4} = 165.000\, d_2^2\,,$$

d_2 is the inner thread diameter of the rod or screw [mm],
d_2 = 12 mm for threaded rods d = 16 mm, d_2 = 5 mm for screws d = 8 mm.

The axial capacity of a threaded rod or screw shall fulfil the following condition:

$$\frac{F_{ax,d}}{F_{ax,Rd}} \leq 1$$

where: $F_{ax,Rd}$ Minimum of the design values of the withdrawal capacity and the tensile capacity of the reinforcing rods or screws. The effective penetration length is 50 % of the threaded length [N].

Outside reinforced areas (shaded area in Figure E.1) the shear design shall fulfil the conditions for unreinforced members.

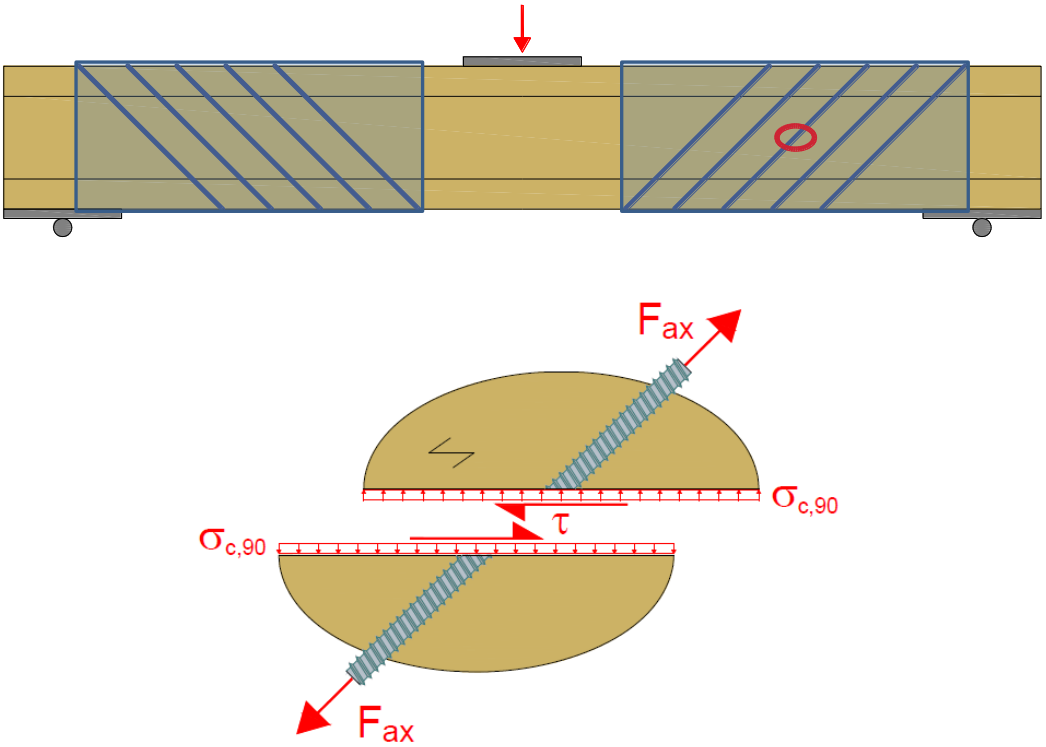

Figure E.1: Timber member with shear reinforcement; shaded areas: reinforced areas with screws arranged under 45°

Annex F

Thermal insulation material on top of rafters

SPAX screws with an outer thread diameter 6 mm ≤ d ≤ 12 mm may be used for the fixing of Thermal insulation material on top of rafters.

The thickness of the insulation shall not exceed 400 mm. The rafter insulation must be placed on top of solid timber or glued laminated timber rafters or cross-laminated timber members and be fixed by battens arranged parallel to the rafters or by wood-based panels on top of the insulation layer. The insulation of vertical facades is also covered by the rules given here.

Screws must be screwed in the rafter through the battens or panels and the insulation without pre-drilling in one sequence.

The angle α between the screw axis and the grain direction of the rafter should be between 30° and 90°.

The rafter consists of solid timber (softwood) according to EN 338, glued laminated timber according to EN 14081, cross-laminated timber, or laminated veneer lumber according to EN 14374 or to European Technical Assessment or similar glued members according to European Technical Assessment and has a minimum width of 60 mm.

The battens must be from solid timber (softwood) according to EN 338:2003-04. The minimum thickness t and the minimum width b of the battens is given as follows:

Screws d ≤ 8,0 mm: b_{min} = 50 mm t_{min} = 30 mm
Screws d = 10 mm: b_{min} = 60 mm t_{min} = 40 mm
Screws d = 12 mm: b_{min} = 80 mm t_{min} = 100 mm

Alternatively, to the battens, panels with a minimum thickness of 20 mm from plywood according to EN 636, particleboard according to EN 312, oriented strand board OSB/3 and OSB/4 according to EN 300 or European Technical Assessment and solid wood panels according to EN 13353 may be used. This only applies to the system with parallel inclined screws.

The insulation must comply with a European Technical Assessment.

Friction forces shall not be considered for the design of the characteristic axial capacity of the screws.

The anchorage of wind suction forces as well as the bending stresses of the battens or the boards, respectively, shall be considered in design. Additional screws perpendicular to the grain of the rafter (angle α = 90°) may be arranged if necessary.

The maximum screw spacing is e_{Scr} = 1,75 m.

Thermal insulation material on rafters with parallel inclined screws

Mechanical model

The system of rafter, Thermal insulation material on top of rafter and battens parallel to the rafter may be considered as a beam on elastic foundation. The batten represents the beam, and the Thermal insulation material on top of the rafter the elastic foundation. The minimum compression stress of the Thermal insulation material at 10 % deformation, measured according to EN 826[1], shall be $\sigma_{(10\,\%)}$ = 0,05 N/mm². The batten is loaded perpendicular to the axis by point loads F_b. Further point loads F_s are from the shear load of the roof due to dead and snow load, which are transferred from the screw heads into the battens.

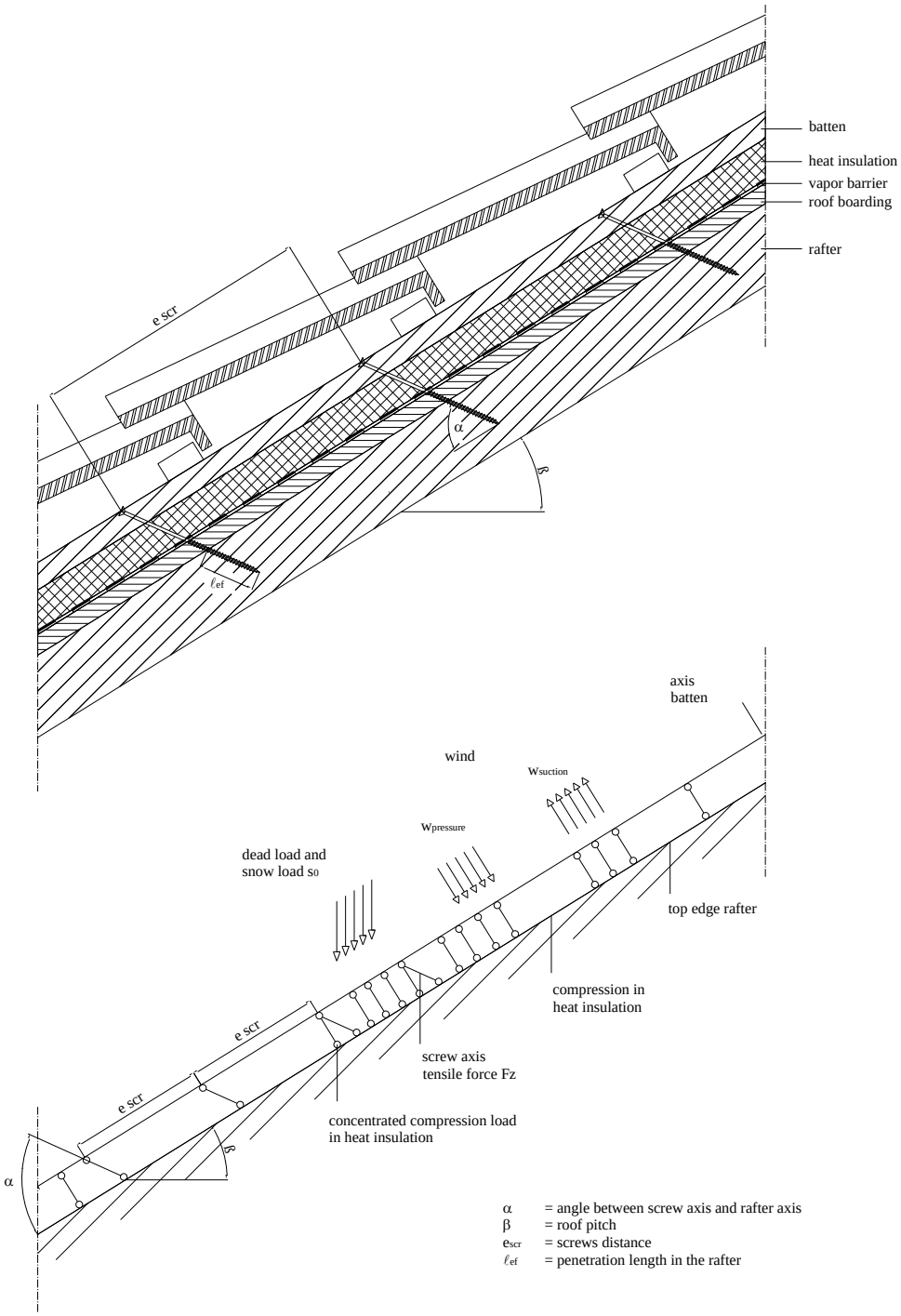

[1] EN 826:1996 Thermal insulating products for building applications - Determination of compression behaviour

Design of the battens

The bending stresses are calculated as:

$$M = \frac{(F_b + F_s) \cdot \ell_{char}}{4}$$

Where

ℓ_{char} = characteristic length $\ell_{char} = \sqrt[4]{\frac{4 \cdot EI}{w_{ef} \cdot K}}$

EI = bending stiffness of the batten [Nmm²]
K = coefficient of subgrade [N/mm³]
w_{ef} = effective width of the Thermal insulation material [mm]
F_b = Point loads perpendicular to the battens [N]
F_s = Point loads perpendicular to the battens, load application in the area of the screw heads [N]

The coefficient of subgrade K may be calculated from the modulus of elasticity E_{HI} and the thickness t_{HI} of the Thermal insulation material if the effective width w_{ef} of the Thermal insulation material under compression is known. Due to the load extension in the Thermal insulation material the effective width w_{ef} is greater than the width of the batten or rafter, respectively. For further calculations, the effective width w_{ef} of the Thermal insulation material may be determined according to:

$$w_{ef} = w + t_{HI} / 2$$

where
w = minimum width of the batten or rafter, respectively [mm]
t_{HI} = thickness of the Thermal insulation material [mm]

$$K = \frac{E_{HI}}{t_{HI}}$$

The following condition shall be satisfied:

$$\frac{\sigma_{m,d}}{f_{m,d}} = \frac{M_d}{W \cdot f_{m,d}} \leq 1$$

For the calculation of the section modulus W the net cross section has to be considered.

The shear stresses shall be calculated according to:

$$V = \frac{(F_b + F_s)}{2}$$

The following condition shall be satisfied:

$$\frac{\tau_d}{f_{v,d}} = \frac{1,5 \cdot V_d}{A \cdot f_{v,d}} \leq 1$$

For the calculation of the cross section area the net cross section has to be considered.

Design of the Thermal insulation material

The compressive stresses in the Thermal insulation material shall be calculated according to:

$$\sigma = \frac{1,5 \cdot F_b + F_s}{2 \cdot \ell_{char} \cdot w}$$

The design value of the compressive stress shall not be greater than 110 % of the compressive stress at 10 % deformation calculated according to EN 826.

Design of the screws

The screws are loaded predominantly axially. The axial tension force in the screw may be calculated from the shear loads of the roof R_s:

$$T_S = \frac{R_S}{\cos\alpha}$$

The load-carrying capacity of axially loaded screws is the minimum design value of the axial withdrawal capacity of the threaded part of the screw, the head pull-through capacity of the screw and the tensile capacity of the screw.

In order to limit the deformation of the screw head for Thermal insulation material thicknesses over 200 mm or with compressive strength below 0,12 N/mm², respectively, the axial withdrawal capacity of the screws shall be reduced by the factors k_1 and k_2:

$$F_{ax,\alpha,Rd} = \min\left\{\frac{f_{ax,d}\cdot d\cdot \ell_{ef}\cdot k_1\cdot k_2}{1.2\cdot\cos^2\alpha+\sin^2\alpha}\cdot\left(\frac{\rho_k}{350}\right)^{0.8};f_{head,d}\cdot d_h^2\cdot\left(\frac{\rho_k}{350}\right)^{0.8};\frac{f_{tens,k}}{\gamma_{M2}}\right\}$$ for SPAX screws with partial thread

$$F_{ax,\alpha,Rd} = \min\left\{\begin{array}{l}\dfrac{f_{ax,d}\cdot d\cdot \ell_{ef}\cdot k_1\cdot k_2}{1,2\cdot\cos^2\alpha+\sin^2\alpha}\cdot\left(\dfrac{\rho_k}{350}\right)^{0,8}\\ \max\left\{f_{head,d}\cdot d_h^2;\dfrac{f_{ax,d}\cdot d\cdot \ell_{ef,b}\cdot k_1\cdot k_2}{1,2\cdot\cos^2\alpha+\sin^2\alpha}\right\}\cdot\left(\dfrac{\rho_k}{350}\right)^{0,8}\\ \dfrac{f_{tens,k}}{\gamma_{M,2}}\end{array}\right\}$$ for SPAX screws with full or double thread

where:

$f_{ax,d}$	design value of the axial withdrawal parameter of the threaded part of the screw [N/mm²]
d	outer thread diameter of the screw [mm]
ℓ_{ef}	Point side penetration length of the threaded part of the screw in the batten [mm], $l_{ef} \geq 40$ mm
$\ell_{ef,b}$	Penetration length of the threaded part of the screw in the batten [mm]
α	Angle between grain and screw axis [°] ($\alpha \geq 30°$)
ρ_k	characteristic density of the wood-based member [kg/m³]
$f_{head,d}$	design value of the head pull-through capacity of the screw [N/mm²]
d_h	head diameter [mm]
$f_{tens,k}$	characteristic tensile capacity of the screw [N]
γ_{M2}	partial factor according to EN 1993-1-1 or to the particular national annex
k_1	min {1; $200/t_{HI}$}
k_2	min {1; $\sigma_{10\%}/0,12$}
t_{HI}	thickness of the Thermal insulation material [mm]
$\sigma_{10\%}$	compressive stress of the Thermal insulation material under 10 % deformation [N/mm²]

If equation k_1 and k_2 are considered, the deflection of the battens does not need to be considered. Alternatively to the battens, panels with a minimum thickness of 20 mm from plywood according to EN 636 or an ETA or national provisions that apply at the installation site, particle board according to EN 312 or an ETA or national provisions that apply at the installation site, oriented strand board according to EN 300 or an ETA or national provisions that apply at the installation site and solid wood panels according to EN 13353 or an ETA or national provisions that apply at the installation site or cross laminated timber according to an ETA may be used.

Thermal insulation material on rafters with alternatively inclined screws

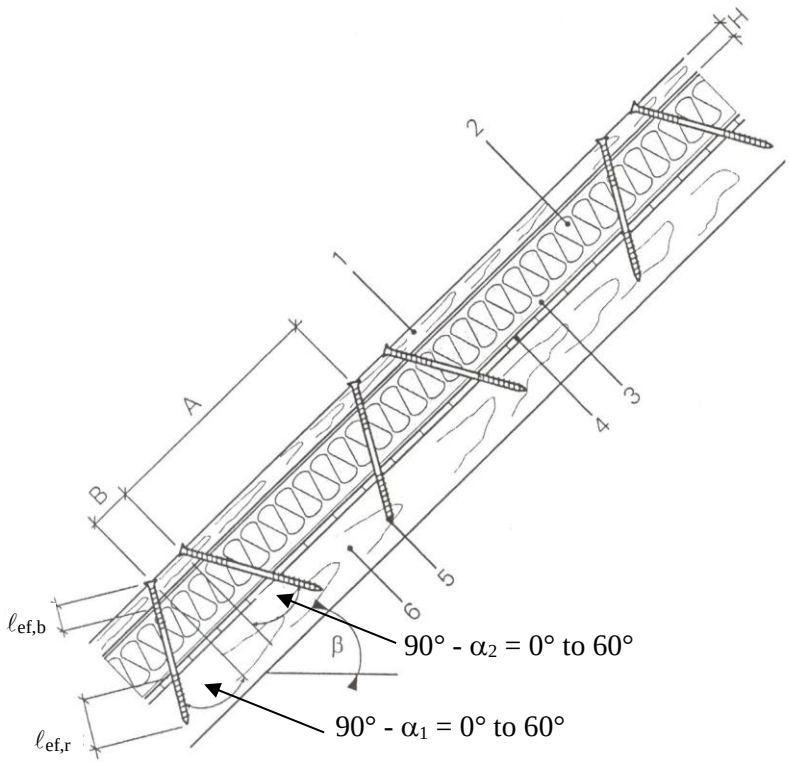

1 Counter batten
2 Insulation
3 Vapour barrier
4 Sheathing
5 Compressive screw
6 Rafter

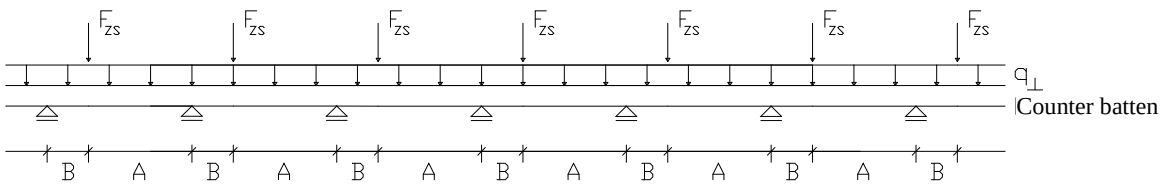

Mechanical model

Depending on the screw spacing and the arrangement of tensile and compressive screws with different inclinations the battens are loaded by significant bending moments. The bending moments are derived based on the following assumptions:

- The tensile and compressive loads in the screws are determined based on equilibrium conditions from the actions parallel and perpendicular to the roof plane.
  These actions are constant line loads $q_\perp$ and $q_{||}$.
- The screws act as hinged columns supported 10 mm within the batten or rafter, respectively. The effective column length consequently equals the length of the screw between batten and rafter plus 20 mm.
- The batten is considered as a continuous beam with a constant span ℓ = A + B.
  The compressive screws constitute the supports of the continuous beam while the tensile screws transfer concentrated loads perpendicular to the batten axis.

The screws are predominantly loaded in withdrawal or compression, respectively. The screw's normal forces are determined based on the loads parallel and perpendicular to the roof plane:

Compressive screw: $$F_{c,Ed} = (A+B)\cdot\left(-\frac{q_{II}}{\cos\alpha_1 + \sin\alpha_1 / \tan\alpha_2} - \frac{q_\perp \cdot \sin(90° - \alpha_2)}{\sin(\alpha_1 + \alpha_2)}\right)$$

Tensile screw: $$F_{t,Ed} = (A+B)\cdot\left(\frac{q_{II}}{\cos\alpha_2 + \sin\alpha_2 / \tan\alpha_1} - \frac{q_\perp \cdot \sin(90° - \alpha_1)}{\sin(\alpha_1 + \alpha_2)}\right)$$

The bending moments in the batten follow from the constant line load $q_\perp$ and the load components perpendicular to the batten from the tensile screws. The span of the continuous beam is (A + B). The load component perpendicular to the batten from the tensile screw is:

$$F_{ZS,Ed} = (A+B)\cdot\left(\frac{q_{II}}{1/\tan\alpha_1 + 1/\tan\alpha_2} - \frac{q_\perp \cdot \sin(90° - \alpha_1)\cdot\sin\alpha_2}{\sin(\alpha_1+\alpha_2)}\right)$$

Where:

q_{II} Constant line load parallel to batten [N/mm]

$q_\perp$ Constant line load perpendicular to batten [N/mm]

α_1 Angle between compressive screw axis and grain direction [°]

α_2 Angle between tensile screw axis and grain direction [°]

A positive value for F_{ZS} means a load towards the rafter, a negative value a load away from the rafter.

Design of the screws

The load-carrying capacity of the screws shall be calculated as follows:

Screws loaded in tension:

$$F_{ax,\alpha,Rd} = \min\left\{\frac{f_{ax,d}\cdot d\cdot \ell_{ef,b}}{1.2\cdot\cos^2\alpha + \sin^2\alpha}\cdot\left(\frac{\rho_{b,k}}{350}\right)^{0.8}; \frac{f_{ax,d}\cdot d\cdot \ell_{ef,r}}{1.2\cdot\cos^2\alpha + \sin^2\alpha}\cdot\left(\frac{\rho_{r,k}}{350}\right)^{0.8}; \frac{f_{tens,k}}{\gamma_{M2}}\right\}$$

Screws loaded in compression:

$$F_{ax,\alpha,Rd} = \min\left\{\frac{f_{ax,d}\cdot d\cdot \ell_{ef,b}}{1.2\cdot\cos^2\alpha + \sin^2\alpha}\cdot\left(\frac{\rho_{b,k}}{350}\right)^{0.8}; \frac{f_{ax,d}\cdot d\cdot \ell_{ef,r}}{1.2\cdot\cos^2\alpha + \sin^2\alpha}\cdot\left(\frac{\rho_{r,k}}{350}\right)^{0.8}; \frac{\kappa_c\cdot N_{pl,k}}{\gamma_{M,1}}\right\}$$

where:

$f_{ax,d}$	design value of the axial withdrawal capacity of the threaded part of the screw [N/mm²]
d	outer thread diameter of the screw [mm]
$\ell_{ef,b}$	Length of the threaded part in the batten including the head for tensile and excluding the head for compressive force [mm]
$\ell_{ef,r}$	penetration length of the threaded part of the screw in the rafter [mm], $l_{ef} \geq 40$ mm
$\rho_{b,k}$	characteristic density of the batten [kg/m³]
$\rho_{r,k}$	characteristic density of the rafter [kg/m³]
α	angle α_1 or α_2 between screw axis and grain direction, $30° \leq \alpha_1 \leq 90°$, $30° \leq \alpha_2 \leq 90°$
$f_{tens,k}$	characteristic tensile capacity of the screw [N]
γ_{M1}, γ_{M2}	partial factor according to EN 1993-1-1 or to the particular national annex
$\kappa_c \cdot N_{pl,k}$	Buckling capacity of the screw [N]

Free screw length [mm]	Carbon steel				Stainless steel	
	6,0 mm	8,0 mm	10,0 mm	12,0 mm	10,0 mm	12,0 mm
	$\kappa_c \cdot N_{pl,k}$ [kN]	$\kappa_c \cdot N_{pl,k}$ [kN]	$\kappa_c \cdot N_{pl,k}$ [kN]	$\kappa_c \cdot N_{pl,k}$ [kN]	$\kappa_c \cdot N_{pl,k}$ [kN]	$\kappa_c \cdot N_{pl,k}$ [kN]
≤ 100	1,12	2,79	6,09	14,3	5,22	11,3
120	0,85	2,12	4,68	11,2	4,16	9,37
140	0,66	1,66	3,70	8,98	3,36	7,79
160	0,53	1,34	2,99	7,33	2,76	6,53
180	0,43	1,10	2,48	6,09	2,30	5,52
200		0,92	2,07	5,13	1,94	4,71
220		0,78	1,76	4,38	1,66	4,06
240		0,67	1,51	3,79	1,44	3,53
260		0,58	1,32	3,30	1,26	3,10
280		0,51	1,15	2,90	1,11	2,74
300		0,45	1,02	2,57	0,98	2,44
320		0,40	0,91	2,29	0,88	2,18
340		0,36	0,82	2,06	0,79	1,97
360		0,32	0,73	1,86	0,71	1,78
380		0,29	0,67	1,68	0,65	1,62
400		0,26	0,61	1,53	0,59	1,48
420		0,24	0,55	1,40	0,54	1,36
440		0,22	0,51	1,29	0,49	1,25
460		0,20	0,47	1,19	0,46	1,15
480		0,19	0,43	1,10	0,42	1,06

Environmental Product Declaration

In accordance with ISO 14025:2006 and EN 15804:2012+A2:2019/AC:2021 for:

Carbon steel screws

from

SPAX International GmbH & Co. KG

Programme:	The International EPD System, www.environdec.com
Programme operator:	EPD International AB
Type of EPD:	EPD of multiple products, based on the average results of the product group
EPD registration number:	EPD-IES-0025601:001
Version date	2026-02-12
Validity date:	2031-02-11

An EPD may be updated or depublished if conditions change. To find the latest version of the EPD and to confirm its validity, see www.environdec.com

General information

Programme information

Programme:	The International EPD® System
Address:	EPD International AB Box 210 60 SE-100 31 Stockholm Sweden
Website:	www.environdec.com
E-mail:	support@environdec.com

Accountabilities for PCR, LCA and independent, third-party verification
Product Category Rules (PCR)
CEN standard EN 15804 serves as the Core Product Category Rules (PCR)
Product Category Rules (PCR): Construction Products, PCR 2019:14, Version 2.0.1 UN CPC code: Nr. Code 42944 Nails, tacks, staples (except staples in strips), screws, bolts, nuts, screw hooks, rivets, cotters, cotter-pins, washers and similar articles, of iron, steel, copper or aluminium
PCR review was conducted by: The Technical Committee of the International EPD System. A full list of members is available on www.environdec.com. The review panel may be contacted via support@environdec.com. Chairs of the PCR review: Rob Rouwette (chair), Noa Meron (co-chair)
Life Cycle Assessment (LCA)
LCA accountability: brands & values GmbH, *info@brandsandvalues.com*
Third-party verification
Independent third-party verification of the declaration and data, according to ISO 14025:2006, via: ☒ EPD verification by individual verifier Third-party verifier: *Marcel Gómez Ferrer, Marcel Gómez Consultoria Ambiental* Approved by: International EPD System
Procedure for follow-up of data during EPD validity involves third party verifier: ☐ Yes ☒ No

The EPD owner has the sole ownership, liability, and responsibility for the EPD.

EPDs within the same product category but published in different EPD programmes, may not be comparable. For two EPDs to be comparable, they shall be based on the same PCR (including the same first-digit version number) or be based on fully aligned PCRs or versions of PCRs; cover products with identical functions, technical performances and use (e.g. identical declared/functional units); have identical scope in terms of included life-cycle stages (unless the excluded life-cycle stage is demonstrated to be insignificant); apply identical impact assessment methods (including the same version of characterisation factors); and be valid at the time of comparison.
For further information about comparability, see EN 15804 and ISO 14025.

Information about EPD owner

Owner of the EPD: SPAX International GmbH & Co. KG, Kölner Straße 71-77, D-58256 Ennepetal, Germany
Contact: Frank Solbrig; frank.solbrig@spax.com
Description of the organisation: Since 1823, the ALTENLOH, BRINCK & CO Group has been active in the field of fastening and plastics technology.
The group of companies combines several independent divisions: the SPAX division with SPAX International GmbH & Co. KG as the parent company, the America division and the Medical Care division with SABEU GmbH & Co. KG.
The SPAX brand has stood for innovative wood fasteners, quality and performance made in Germany since 1967.
Do-it-yourselfers and professional woodworkers all over the world trust SPAX products and services. Today, the SPAX division produces up to 40 million screws every day and stands for the development and marketing professional and easy-to-implement solutions for fastening systems.
Product-related or management system-related certifications: ISO 9001, ISO 14001, ISO 50001
Name and location of production site(s): SPAX International GmbH & Co. KG, Kölner Straße 71-77, D-58256 Ennepetal, Germany

Product information

Product name: SPAX screws made of carbon steel (SPAX self-tapping screws)
UN CPC code: CPC, Version 2.1 - Code 42944
Product identification: SPAX screws can be clearly identified by their unique 13 digit article number or EAN-Code applied to the packaging labels:

Furthermore, they can be identified by the registered brand name SPAX, their distinctive green colour of the packaging and the manufacturer's address on the boxes' backside.
SPAX catalogues show more than 2.000 different article numbers distributed via professional hardware, the retail shops and the Internet (B2C).

Product description:
SPAX screws are self-tapping screws to be used in a wide field of applications such as timber structures, wood-based applications such as windows, doors, furniture, general joinery or carpentry applications and renovation.
They shall be threaded over a part or over the full length providing certain tip geometries such as 4CUT. The screws shall be produced from carbon steel wire and have a nominal outer thread diameter of 2,5 mm to 12,0 mm in lengths from 12 up to 800 mm (see different EPD for SPAX stainless steel screws). A hardening process provides the desired strength to penetrate different timbers or wood-based panels without pre-drilling. The screws have different head shapes such as countersunk head, raised countersunk head, Pan Head and others equipped with different recesses such as T-STAR plus or conventional PZ or PH. Usually, a coating e.g. electro-galvanized zinc plating is applied to serve as corrosion protection during transportation, storage and final use in products or buildings. An additional lubrification layer might be applied to provide easy installation and reduce drive in torque and friction. In protected, unweathered or dry indoor conditions the coated screws are assumed to last for decades. For exterior and weathered conditions SPAX screws made of different stainless steel grades are available (see different EPD for stainless steel screws).

The screws are driven into the timber or wood-based material either by using manual screwdrivers, but mostly by using battery screw driver tools or similar equipment. Collated screws mostly provided with plastic strips allow for faster installation of high numbers of the same screw size, but their share in sales volume is small, just as the range is small itself.

For environmental reasons and ease of recycling, SPAX screws are predominantly packaged in cardboard boxes (82%). Whereas retailers require plastic packaging with transparent lids for product presentation on store shelves. SPAX is aiming to reduce the share of plastic in the boxes within the next years, and has recently launched the first carton based alternatives. See SPAX's environmental report published on spax.com for details.

At the end of their life cycle SPAX screws can be easily recycled as scrap metal. The product can be reused if there is no damage caused by corrosion or deterioration during lifetime, false assembly or unprofessional disassembly. However, SPAX screws are usually used once, as reuse is generally uneconomical for the small screw dimensions and the time being. But developments on enhancing deconstruction capabilities for timber structures and re-use are a future target for SPAX, including refurbishing services allowing for re-use and a second lifetime (to meet the Green Goals of the European Union) and a more sustainable building sector.

For the use in load-bearing timber structures SPAX screws are regarded as a building product, and they fall under the European Construction Products Regulation (EU) No. 305/2011. Screws' mechanical properties (called essential characteristics) are documented in European Assessment Document ETA-12/0114 or ETA-16/0617 and they bear a CE-Marking on the labels of the packaging to show conformity (see picture above). A Declaration of Performance DoP can be downloaded on the website spax.com
Specification of the intended use as a building product according to ETA-12/0114 or ETA-16/0617:
The screws are used for connections in load bearing timber structures between members of solid timber (softwood), glued laminated timber (softwood), cross-laminated timber, and laminated veneer lumber (softwood), similar glued members, wood-based panels or steel. The screws are also used for connections in load bearing members of solid timber (hardwood), glued laminated timber (hardwood) or laminated veneer lumber (hardwood). SPAX screws with a thread over the full length are also used as tensile or compressive reinforcement perpendicular to the grain or as shear reinforcement in softwood members. Furthermore, SPAX screws are suitable for fixing on-roof insulation.

LCA information

Declared unit: 1kg
Service life: 50 years
Time representativeness: 2024
Geographical scope: Europe
Database(s) and LCA software used: LCA for Experts version 10.9; LCA Managed Content (2024.2) ecoinvent 3.9.1 was used when no appropriate dataset in LCA Managed Content was available.
Description of system boundaries: b) Cradle to gate with options, modules C1–C4, module D and with optional modules (A1–A3 + C + D and additional modules). The additional module is A5. The modularity and the polluter payer principles have been followed.
Module A4 is not considered since this will vary depending on the location of the customer. B-modules are not considered since no activities are expected in the use phase.

System diagram:

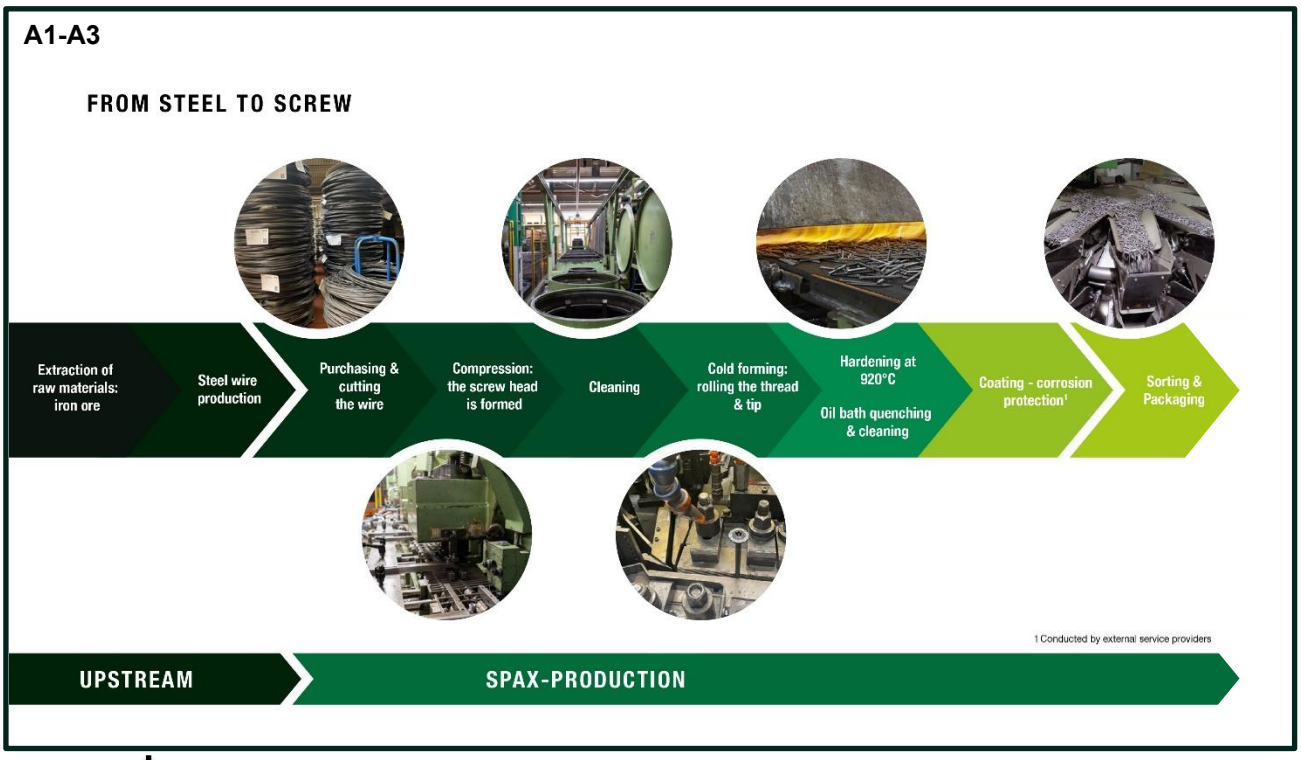

A5
Electricity for installation
Treatment of packaging waste (cardboard recycling, PE incineration)

C1
Electricity for deconstruction

C2
Transport to recycling (80km truck)

C3
Recycling of steel (end of waste after sorting)

C4
Disposal (not relevant)

D
Potential benefits from incineration (thermal and electric energy)

Potential benefits from recycled materials (only primary share of material)

More information: www.spax.com

Modules declared, geographical scope, share of specific data (in GWP-GHG results) and data variation (in GWP-GHG results):

	Product stage			Construction process stage		Use stage							End of life stage				Resource recovery stage
	Raw material supply	Transport	Manufacturing	Transport	Construction installation	Use	Maintenance	Repair	Replacement	Refurbishment	Operational energy use	Operational water use	De-construction demolition	Transport	Waste processing	Disposal	Reuse-Recovery-Recycling-potential
Module	**A1**	**A2**	**A3**	**A4**	**A5**	**B1**	**B2**	**B3**	**B4**	**B5**	**B6**	**B7**	**C1**	**C2**	**C3**	**C4**	**D**
Modules declared	X	X	X	ND	X	ND	ND	ND	ND	ND	ND	ND	X	X	X	X	X
Geography	EU	EU	DE		EU								EU	EU	EU	EU	EU
Specific data used	9%					-	-	-	-	-	-	-	-	-	-	-	-
Variation – products	<10%					-	-	-	-	-	-	-	-	-	-	-	-
Variation – sites	N/A					-	-	-	-	-	-	-	-	-	-	-	-

Modules declared: (X = included; ND = not declared).

Electricity: For processes controlled by the EPD owner, green electricity with a GWP-GHG of 0.054 kg CO_2e/kWh was modelled.

Infrastructure/capital goods: not considered

Scenario information:
In module A5, electricity for installation as well as treatment of the packaging materials is considered.

Module A5: Scenario information	**Amount/declared unit**
Ancillary materials for installation	None
Water use	None
Other resource use	None
Quantitative description of energy type (regional mix) and consumption during the installation process	0.03 kWh electricity (European grid mix)
Waste materials on the building site before waste processing, generated by the product's installation (specified by type)	None
Output materials (specified by type) as result of waste processing at the building site e.g. of collection for recycling, for energy recovery, disposal (specified by route)	0.137 kg Cardboard (Recycling) 0.004 kg Film (LDPE) (Incineration) 0.063 kg Pallet (multi use) (Reuse)
Direct emissions to ambient air, soil and water	None

At the end-of-life of the product, 100% recycling of the steel is assumed. End-of-waste is assumed after sorting.

Modules C1-C4: Scenario information	Amount/declared unit
Collected separately	0 kg
Collected with mixed construction waste and sorted	1 kg steel
For re-use	0 kg
For recycling	1 kg
For energy recovery	0 kg
For final deposition	0 kg
Assumptions for scenario development, e.g. transportation	0.03 kWh electricity (European grid mix) for deconstruction 80 km truck to waste processing (EURO 5, 17.3 t payload capacity, 0.03 l Diesel/tkm, 50% capacity utilisation, 7850 kg/m3 , volume capacity utilisation factor = 1)

Potential benefits from the incineration of packaging materials as well as the recycling of steel are declared in module D.

Module D: Scenario information	Amount/declared unit
Electric energy	0.029 MJ
Thermal energy	0.051 MJ
Net scrap	0.795 kg

Data quality:
Primary data were collected for the year 2024. A data quality assessment was carried out covering geographical, technical, and temporal representativeness of secondary datasets, as well as precision, completeness, consistency, and data sources of primary data. The assessment included all processes contributing at least 80% to each declared environmental impact indicator. Overall, the data quality is rated as good.

The table below presents the processes contributing more than 10% to the GWP-GHG results of life cycle modules A1–A3.

Process	Source type	Source	Reference year	Data category
Material	Database	Managed LCA Content (Version 2024.2)	2024	Secondary data

Cut-off criteria:
All data collected was taken into account. It can be assumed that the cut-off criteria for considering the use of primary energy and mass according to EN 15804+A2 (<1 % in each case, <5 % in total per declared module) were observed.

Allocation: For secondary materials, the cut-off approach is applied.

Content declaration

The content declaration represents the declared unit of one average kg of screws.

Product content	Mass, kg	Post-consumer recycled material, mass-% of product	Biogenic material, mass-% of product	Biogenic material, kg C/product or declared unit
Carbon Steel	1.000	0.00%	0.00%	0.00
TOTAL	**1.000**	**0.00%**	**0.00%**	**0.00**

Note: No specific information on the post-consumer recycled material is available.

Packaging Materials	Mass, kg	Mass-% (versus the product)	Biogenic material, kg C/product or declared unit
Cardboard	0.137	13.66%	0.056
Film (LDPE)	0.004	0.43%	0.000
Pallet (multi use)	0.063	6.26%	0.028
TOTAL	**0.204**	**20.35%**	**0.084**

Declaration of Substances

The product does not contain any Substances of Very High Concern (SVHC) that exceeds 0.1% of the product weight.

Environmental performance

The estimated impact results are only relative statements, which do not indicate the endpoints of the impact categories, exceeding threshold values, safety margins and/or risks. The results of the end-of-life stage (modules C1-C4) should be considered when using the results of the product stage (modules A1-A3).

EN 15804 +A2 (based on EF 3.1) characterisation factors provided in LCA for Experts were applied. Biogenic CO_2 and materially bound primary energy were adjusted manually based on the composition of the declared unit.

Mandatory impact category indicators according to EN 15804

Results per declared unit								
Indicator	**Unit**	**A1-A3**	**A5**	**C1**	**C2**	**C3**	**C4**	**D**
GWP-fossil	kg CO_2 eq.	3.13E+00	2.51E-02	8.40E-03	9.02E-03	1.44E-02	0.00E+00	-1.39E+00
GWP-biogenic	kg CO_2 eq.	-2.86E-01	3.09E-01	8.62E-05	2.79E-05	1.09E-04	0.00E+00	2.65E-04
GWP-luluc	kg CO_2 eq.	7.07E-03	4.00E-05	1.28E-06	1.48E-04	9.02E-05	0.00E+00	-1.84E-04
GWP-total	kg CO_2 eq.	2.85E+00	3.34E-01	8.49E-03	9.20E-03	1.46E-02	0.00E+00	-1.39E+00
ODP	kg CFC 11 eq.	1.28E-09	2.19E-13	1.90E-13	1.30E-15	2.04E-13	0.00E+00	1.80E-12
AP	mol H^+ eq.	7.82E-03	3.01E-05	1.62E-05	3.83E-05	4.58E-05	0.00E+00	-3.38E-03
EP-freshwater	kg P eq.	1.50E-05	4.56E-08	3.48E-08	3.76E-08	5.98E-08	0.00E+00	-3.32E-07
EP-marine	kg N eq.	2.26E-03	9.84E-06	4.05E-06	1.81E-05	1.81E-05	0.00E+00	-5.44E-04
EP-terrestrial	mol N eq.	2.39E-02	1.10E-04	4.24E-05	2.03E-04	1.99E-04	0.00E+00	-4.88E-03
POCP	kg NMVOC eq.	9.44E-03	2.31E-05	1.07E-05	3.63E-05	4.10E-05	0.00E+00	-2.21E-03
ADP-minerals&metals*	kg Sb eq.	3.01E-05	2.15E-09	1.57E-09	7.66E-10	2.14E-09	0.00E+00	-7.82E-06
ADP-fossil*	MJ	3.24E+01	2.30E-01	1.76E-01	1.16E-01	2.58E-01	0.00E+00	-1.38E+01
WDP*	m^3	8.13E-01	3.91E-03	2.32E-03	1.36E-04	2.56E-03	0.00E+00	-9.38E-02
Acronyms	GWP-fossil = Global Warming Potential fossil fuels; GWP-biogenic = Global Warming Potential biogenic; GWP-luluc = Global Warming Potential land use and land use change; ODP = Depletion potential of the stratospheric ozone layer; AP = Acidification potential, Accumulated Exceedance; EP-freshwater = Eutrophication potential, fraction of nutrients reaching freshwater end compartment; EP-marine = Eutrophication potential, fraction of nutrients reaching marine end compartment; EP-terrestrial = Eutrophication potential, Accumulated Exceedance; POCP = Formation potential of tropospheric ozone; ADP-minerals&metals = Abiotic depletion potential for non-fossil resources; ADP-fossil = Abiotic depletion for fossil resources potential; WDP = Water (user) deprivation potential, deprivation-weighted water consumption							

** Disclaimer: The results of this environmental impact indicator shall be used with care as the uncertainties of these results are high or as there is limited experience with the indicator.*

Additional mandatory and voluntary impact category indicators

Results per declared unit								
Indicator	**Unit**	**A1-A3**	**A5**	**C1**	**C2**	**C3**	**C4**	**D**
GWP-GHG[1]	kg CO_2 eq.	3.13E+00	2.51E-02	8.40E-03	9.17E-03	1.45E-02	0.00E+00	-1.39E+00

[1] This indicator accounts for all greenhouse gases except biogenic carbon dioxide uptake and emissions and biogenic carbon stored in the product. As such, the indicator is identical to GWP-total except that the CF for biogenic CO_2 is set to zero.

Resource use indicators

Results per declared unit								
Indicator	**Unit**	**A1-A3**	**A5**	**C1**	**C2**	**C3**	**C4**	**D**
PERE	MJ	2.02E+01	3.34E+00	1.27E-01	9.98E-03	1.42E-01	0.00E+00	5.06E-01
PERM	MJ	3.19E+00	-3.19E+00	0.00E+00	0.00E+00	0.00E+00	0.00E+00	0.00E+00
PERT	MJ	2.34E+01	1.49E-01	1.27E-01	9.98E-03	1.42E-01	0.00E+00	5.06E-01
PENRE	MJ	3.22E+01	4.15E-01	1.76E-01	1.16E-01	2.58E-01	0.00E+00	-1.38E+01
PENRM	MJ	1.85E-01	-1.85E-01	0.00E+00	0.00E+00	0.00E+00	0.00E+00	0.00E+00
PENRT	MJ	3.24E+01	2.30E-01	1.76E-01	1.16E-01	2.58E-01	0.00E+00	-1.38E+01
SM	MJ	3.31E-01	0.00E+00	0.00E+00	0.00E+00	0.00E+00	0.00E+00	7.95E-01
RSF	MJ	0.00E+00	0.00E+00	0.00E+00	0.00E+00	0.00E+00	0.00E+00	0.00E+00
NRSF	MJ	0.00E+00	0.00E+00	0.00E+00	0.00E+00	0.00E+00	0.00E+00	0.00E+00
FW	m3	2.27E-02	1.43E-04	9.75E-05	1.11E-05	1.11E-04	0.00E+00	-1.40E-01
Acronyms	PERE = Use of renewable primary energy excluding renewable primary energy resources used as raw materials; PERM = Use of renewable primary energy resources used as raw materials; PERT = Total use of renewable primary energy resources; PENRE = Use of non-renewable primary energy excluding non-renewable primary energy resources used as raw materials; PENRM = Use of non-renewable primary energy resources used as raw materials; PENRT = Total use of non-renewable primary energy re-sources; SM = Use of secondary material; RSF = Use of renewable secondary fuels; NRSF = Use of non-renewable secondary fuels; FW = Use of net fresh water							

Waste indicators

Results per declared unit								
Indicator	**Unit**	**A1-A3**	**A5**	**C1**	**C2**	**C3**	**C4**	**D**
Hazardous waste disposed	kg	5.32E-06	2.94E-10	2.55E-10	4.44E-12	2.74E-10	0.00E+00	-1.03E-07
Non-hazardous waste disposed	kg	8.63E-02	2.24E-04	1.45E-04	1.89E-05	1.66E-04	0.00E+00	1.66E-01
Radioactive waste disposed	kg	5.73E-04	3.24E-05	2.82E-05	2.11E-07	3.02E-05	0.00E+00	-6.46E-06

Output flow indicators

Results per declared unit								
Indicator	**Unit**	**A1-A3**	**A5**	**C1**	**C2**	**C3**	**C4**	**D**
Components for re-use	kg	0.00E+00	6.26E-02	0.00E+00	0.00E+00	0.00E+00	0.00E+00	0.00E+00
Material for recycling	kg	0.00E+00	0.00E+00	0.00E+00	0.00E+00	1.00E+00	0.00E+00	0.00E+00
Materials for energy recovery	kg	0.00E+00	0.00E+00	0.00E+00	0.00E+00	0.00E+00	0.00E+00	0.00E+00
Exported energy, electricity	MJ	0.00E+00	2.86E-02	0.00E+00	0.00E+00	0.00E+00	0.00E+00	0.00E+00
Exported energy, thermal	MJ	0.00E+00	5.08E-02	0.00E+00	0.00E+00	0.00E+00	0.00E+00	0.00E+00

Variation

The following table states the variation for the impact indicators for which variation is above 10%.

LCA results of 1 declared unit (A-C)	Unit	Min	Average	Max	Variability
GWP-biogenic	kg CO2 eq	2.24E-02	1.20E-02	2.63E-02	-46% / 17%
GWP-luluc	kg CO2 eq	7.35E-03	3.08E-03	8.93E-03	-58% / 21%
ODP	kg CFC11 eq	1.28E-09	2.51E-11	1.74E-09	-98% / 36%
EP-freshwater	kg P eq	1.52E-05	9.05E-06	1.75E-05	-41% / 15%
Potential for formation of tropospheric ozone (POCP)	kg NMVOC eq	9.55E-03	6.11E-03	1.08E-02	-36% / 13%
PERE	MJ	2.38E+01	1.07E+01	2.45E+01	-55% / 3%
PERT	MJ	2.38E+01	1.26E+01	2.80E+01	-47% / 17%
Use of secondary materials (SM)	kg	3.31E-01	2.76E-01	3.52E-01	-17% / 6%
HWD	kg	5.32E-06	3.70E-07	7.15E-06	-93% / 34%
RWD	kg	6.64E-04	5.91E-04	8.61E-04	-11% / 30%
Components for reuse (CRU)	kg	6.26E-02	3.76E-02	7.18E-02	-40% / 15%
EEE	MJ	2.86E-02	6.55E-03	3.67E-02	-77% / 29%
EET	MJ	5.08E-02	1.16E-02	6.53E-02	-77% / 29%

Abbreviations

Abbreviation	Definition
General Abbreviations	
EN	European Norm (Standard)
EPD	Environmental Product Declaration
EF	Environmental Footprint
GPI	General Programme Instructions
ISO	International Organization for Standardization
LCA	Life Cycle Assessment
PCR	Product Category Rules
CEN	European Committee for Standardization
CPC	Central product classification
Environmental Impact Indicators (EN 15804)	
GHG	Greenhouse gas
GWP	Global Warming Potential (kg CO_2 eq.)
GWP-fossil	Global Warming Potential from fossil sources (kg CO_2 eq.)
GWP-biogenic	Global Warming Potential from biogenic sources (kg CO_2 eq.)
GWP-luluc	Global Warming Potential from land use and land use change (kg CO_2 eq.)
GWP-total	Total Global Warming Potential (kg CO_2 eq.)
GWP-GHG	Global Warming Potential for greenhouse gases (kg CO_2 eq.)
ODP	Ozone Depletion Potential (kg CFC-11 eq.)
AP	Acidification Potential (mol H^+ eq.)
EP	Eutrophication Potential
EP-freshwater	Freshwater eutrophication potential (kg P eq.)
EP-marine	Marine eutrophication potential (kg N eq.)
EP-terrestrial	Terrestrial eutrophication potential (mol N eq.)
POCP	Photochemical Ozone Creation Potential (kg NMVOC eq.)
ADP	Abiotic Depletion Potential
ADP-minerals&metals	Abiotic depletion potential for non-fossil resources (kg Sb eq.)
ADP-fossil	Abiotic depletion potential for fossil resources (MJ)
WDP	Water Deprivation Potential (m^3)
Resource Use Indicators	
PERE	Use of renewable primary energy excluding renewable primary energy resources used as raw materials (MJ)
PERM	Use of renewable primary energy resources used as raw materials (MJ)
PERT	Total use of renewable primary energy resources (MJ)
PENRE	Use of non-renewable primary energy excluding non-renewable primary energy resources used as raw materials (MJ)
PENRM	Use of non-renewable primary energy resources used as raw materials (MJ)
PENRT	Total use of non-renewable primary energy resources (MJ)
SM	Use of secondary material (kg)
RSF	Use of renewable secondary fuels (MJ)
NRSF	Use of non-renewable secondary fuels (MJ)
FW	Use of net fresh water (m^3)
Waste Indicators	
HW	Hazardous Waste (disposed) (kg)
NHW	Non-Hazardous Waste (disposed) (kg)
RW	Radioactive Waste (disposed) (kg)
Output Flow Indicators	
CFR	Components for Reuse (kg)
MR	Material for Recycling (kg)
MER	Materials for Energy Recovery (kg)
EEE	Exported Energy, Electricity (MJ)

EET	Exported Energy, Thermal (MJ)
Lifecycle Stages / Modules	
A1	Raw material supply
A2	Transport
A3	Manufacturing
A4	Transport to site
A5	Construction/Installation
B1	Use
B2	Maintenance
B3	Repair
B4	Replacement
B5	Refurbishment
B6	Operational energy use
B7	Operational water use
C1	Deconstruction/Demolition
C2	Transport to waste processing
C3	Waste processing
C4	Disposal
D	Reuse-Recovery-Recycling potential
Other Relevant Terms	
B2C	Business to consumer
CAS No.	Chemical Abstracts Service Number
CFC-11 eq.	Chlorofluorocarbon-11 Equivalents
CO_2 eq.	Carbon Dioxide Equivalents
DoP	Declaration of Performance
EC No.	European Community Number
ETA	European Technical Assessment
kg	Kilogram
kg C	Kilograms of Carbon
kg CO_2 eq.	Kilograms of Carbon Dioxide Equivalent
m^3	Cubic Meter
MJ	Megajoule
N eq.	Nitrogen Equivalents
ND	Not Declared
NMVOC	Non-Methane Volatile Organic Compounds
P eq.	Phosphorus Equivalents
Sb eq.	Antimony Equivalents
SVHC	Substances of Very High Concern

References

ECHA Candidate List
Candidate List of Substances of Very High Concern for Authorisation (ECHA Candidate List), dated 21.01.2025, published in accordance with Article 59(10) of the REACH Regulation. Helsinki: European Chemicals Agency.

ecoinvent 3.9.1
ecoinvent, Allocation, cut-off by classification, ecoinvent database version 3.9.1 (2022).

EN 15804
EN 15804:2012+A2:2019, Sustainability of construction works – Environmental product declarations – Core rules for product category of construction products

EPD International
General Programme Instructions for the International EPD System. Version 5.0.1 www.environdec.com. (2025)

EPD International
Product Category Rules (PCR). PCR2019:14. Version 2.0.1. www.environdec.com. (2025)

ISO 9001:2015
Quality management systems – Requirements

ISO 14001: 2015
Environmental management systems - Requirements with guidance for use

ISO 14025:2006
Environmental labels and declarations - Type III environmental declarations - Principles and procedures.

LCA for Experts 10.9
Software and Database for Life Cycle Engineering, Sphera Solutions GmbH, Leinfelden-Echterdingen, 2023 and Managed LCA Content Version (Content Version 2024.2)

Version history

Original Version of the EPD, 2026-02-12

EPD
INTERNATIONAL EPD SYSTEM

www.environdec.com