SIMONWORK BT3 1500 BOX

mobile

155 x 151 x 61 cm

61.0” x 59.4” x 24.0”

5 Años Garantía
Years Guarantee
Jahre Garantie
Ans Garantie
Anos de Garantía
SIMONRACK

MONTAJE · ASSEMBLY · AUFBAU · MONTAGE 6 min

CAPACITÁ TOTALE DELLO SCAFFALE · CAPACITE TOTAL DE L'ETAGERE · GESAMTTRAGFÄHIGKEIT REGAL · LOAD CAPACITY SHELF · DE LA ESTANTERÍA CAPACIDAD TOTAL · DA PRATELEIRA CAPACIDADE TOTAL
120 KG

WHEELS INCLUDED · ROUES INCLUSES · INCLUI RODAS · RÄDER INKL · INCLUYE RUEDAS · INCLUDE RUOTE

PACKAGING 100% RECYCLABLE
Produce de un 90% DE MATERIAL RECICLADO
Made from 90% RECYCLED MATERIAL
Fabriqué à partir de 90% RECYCELTEM MATERIAL
Original 90% MATERIAL RECYCLÉ
Hecho 90% DE MATERIAL RECICLADO
Simon Rack

Carga uniformemente repartida
Evenly distributed load
Gleichmäßig verteilte Last
Charge uniformément répartie
Carga uniformemente distribuída

VIDEO INSTRUCCIONES · VIDEO INSTRUCTIONS · VIDEO ANLEITUNG · VIDEO INSTRUCTIONS

1 x 150x60 cm 59.1”x23.6”	2 x 84 cm 33.1” / 2 x 144 cm 56.7”	1 x MDF 60x150 cm 23.6”x59.1” / 1 x 35x150 cm 13.8”x59.1”	4 x 60 cm 23.6”	4 x 150 cm 59.1”	1 x 150 cm 59.1” / 1 x 60 cm 23.6”
2 x 9,5x19 cm 3.7”x7.5”	1 x 150x20 cm 59.1”x7.9”	14 x	2 x 60 cm 23.6”	2 x 58 cm 22.8”	1 x 35 kg (80 lb) 56x137 cm 22.0”x53.9”
2 x	2 x	14 x			

8 435104 985151

ESTANTERIAS SIMON S.L. B.50.556.463
P.G. ALFAMEN C/ POLIGONO C. Nº3
ALFAMEN (ZARAGOZA)

Simon Rack
SINCE 1964 - MANUFACTURER

www.simonrack.com

www.simonrack.com

PEFC · MADE IN SPAIN European Quality · EPOXY POLIESTER · EMPRESA CERTIFICADA EN SISTEMA DE GESTIÓN DE CALIDAD ISO 9001:2015

INSTRUCCIONES INSTRUCTIONS ANLEITUNG INSTRUCTIONS

Simon Rack
SINCE 1964 - MANUFACTURER

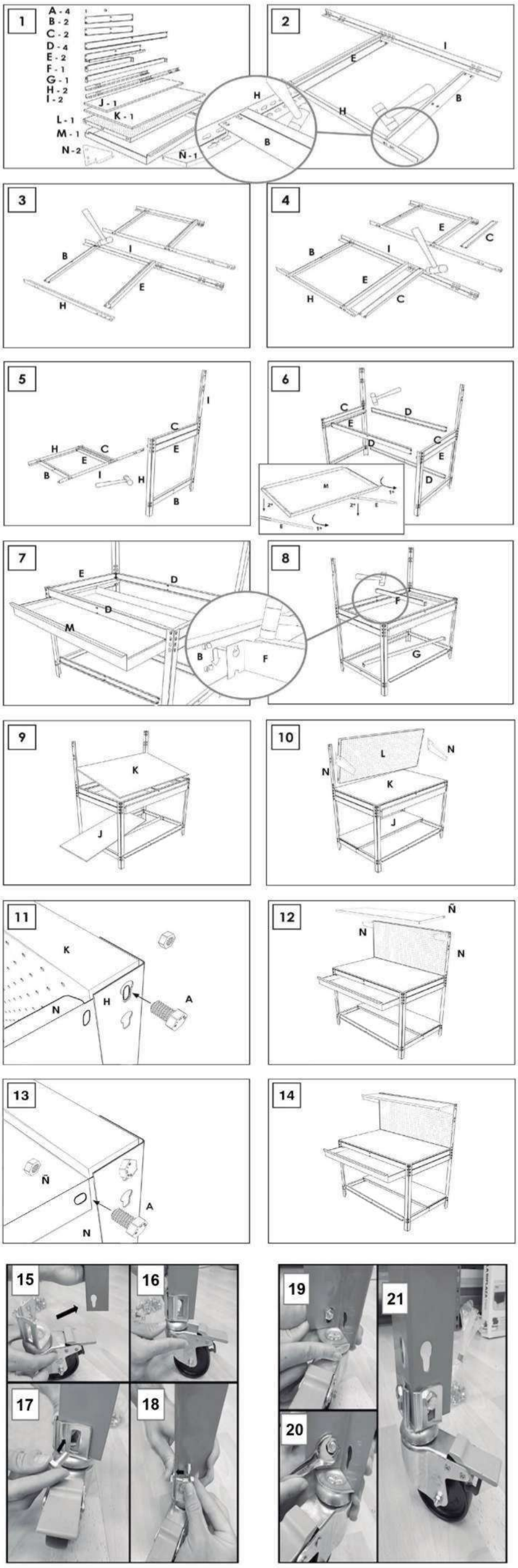

www.instructionsrack.com/bt3box

www.simonrack.com • www.simonrack.com • www.simonrack.com • www.simonrack.com • www.simonrack.com • www.simonrack.com • www.simonrack.com • www.simonrack.com