150 x 80 x 50 cm.
59.0″ x 31.5″ x 19.7″
Ecoclick mini 4/500

5 years SIMONRACK GUARANTEE

MADE IN SPAIN
European Quality

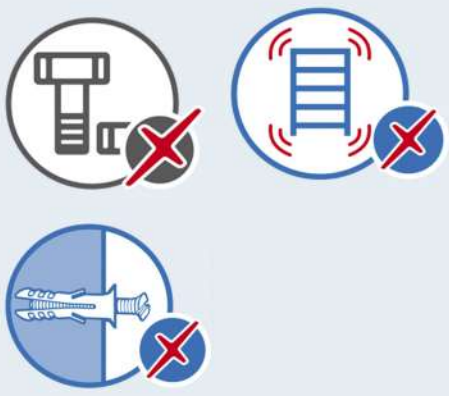

VIDEO INSTRUCTIONS

EPOXY POLIESTER GREY

8 435104 956182

Simon Rack
SINCE 1964 - MANUFACTURER

www.simonrack.com

www.simonrack.com

EMPRESA CERTIFICADA EN SISTEMA DE GESTIÓN DE CALIDAD ISO 9001:2015

EPOXY POLIESTER

INSTRUCTIONS

Simon Rack

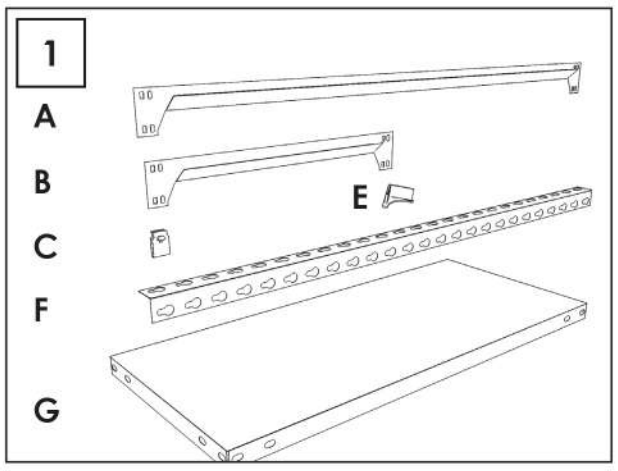

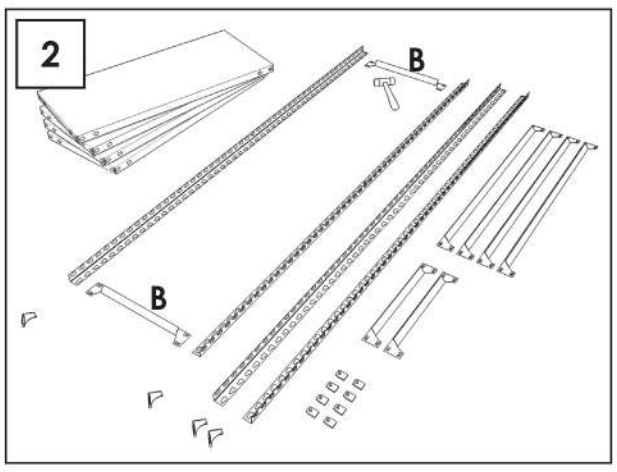

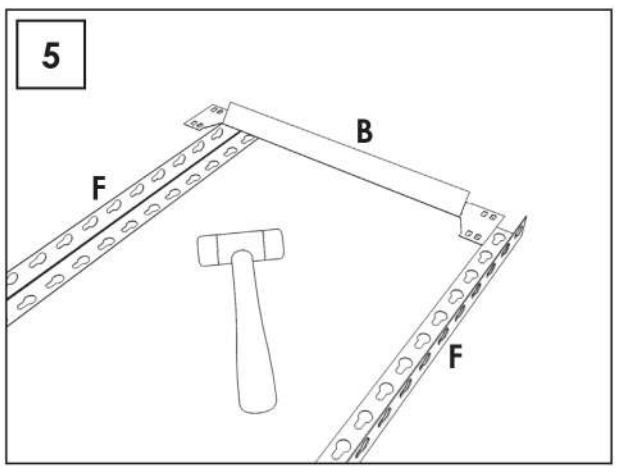

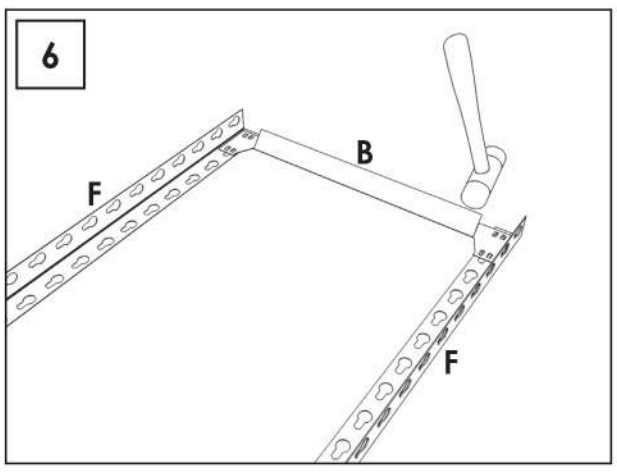

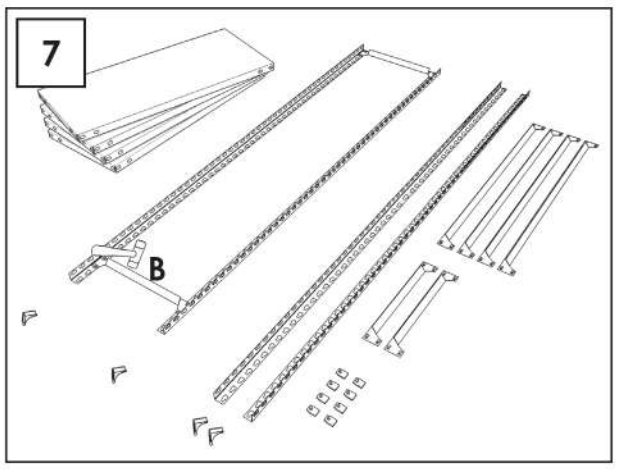

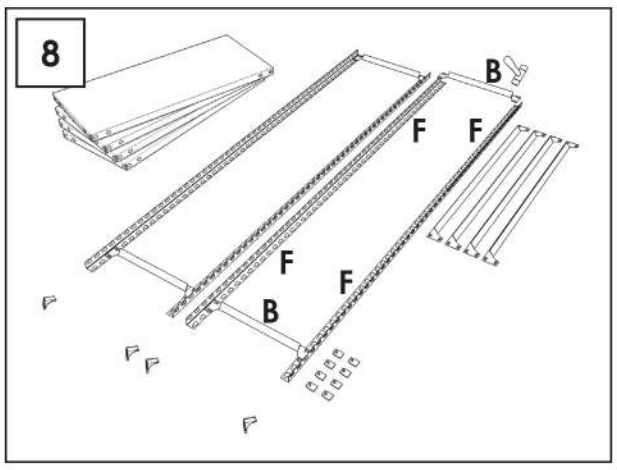

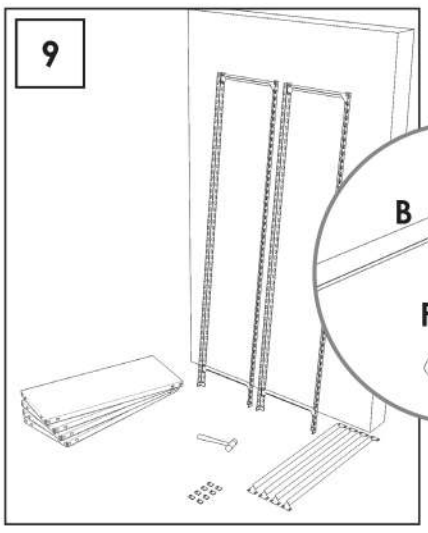

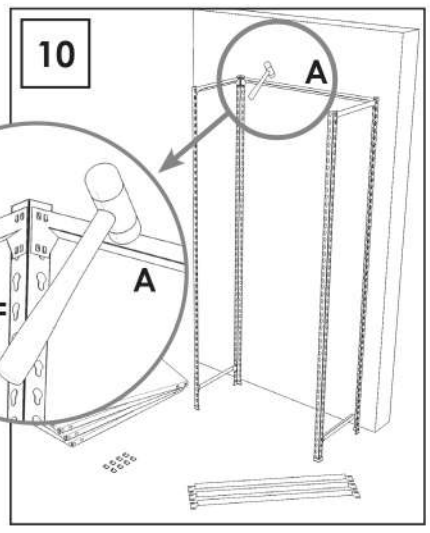

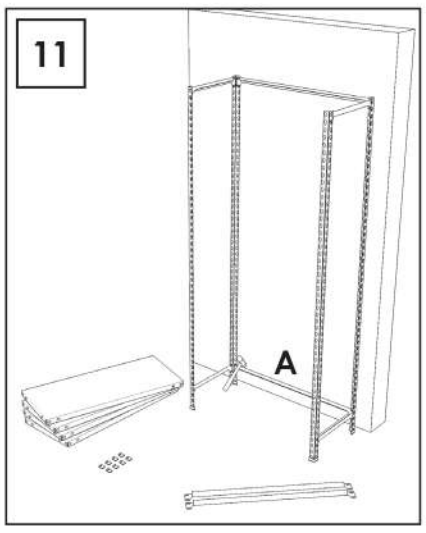

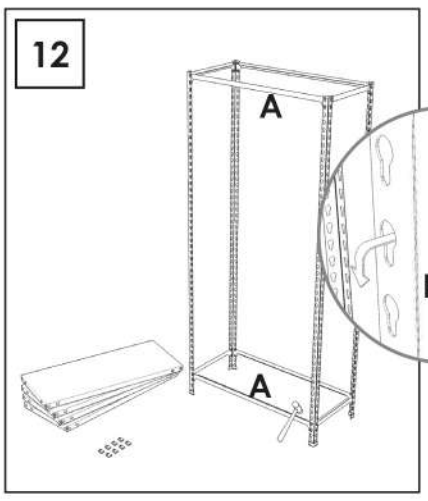

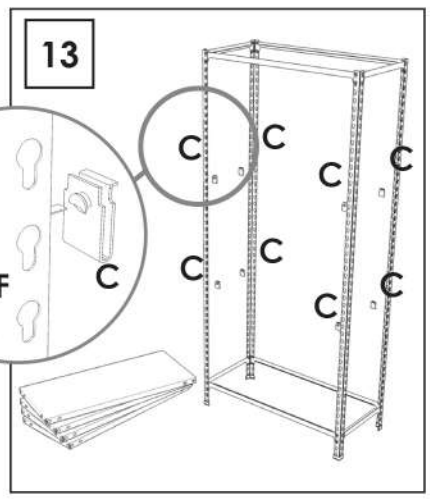

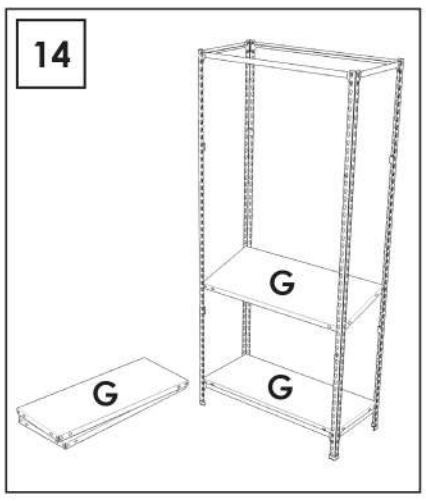

On-line instructions: **www.instructionsrack.com/ecoclick**

www.simonrack.com • www.simonrack.com • www.simonrack.com • www.simonrack.com • www.simonrack.com • www.simonrack.com • www.simonrack.com • www.simonrack.com • www.simonrack.com • www.simonrack.com

SIMONCLASSIC

SIMONCLICK

SIMONOFFICE

SIMONTALLER

BANCOS DE TRABAJO

SIMONHOME

TAQUILLAS

SIMONTITÁN

SIMONINOX

SIMONPALET

SIMONLEVER

ALTILLOS Y PASILLOS ELEVADOS