# SIMONWORK BT4 BOX 1500

## 144,5 x 151 x 75 cm
## 56.9" x 59.4" x 29.5"

5 Años Garantía
Years Guarantee
Jahre Garantie
Ans Garantie
Anos de Garantia
SIMONRACK

360°

MONTAJE · ASSEMBLY · AUFBAU · MONTAGE 9 min

VIDEO INSTRUCCIONES · VIDEO INSTRUCTIONS · ANLEITUNG VIDEO · INSTRUCTIONS VIDEO

| | | | | | |
|---|---|---|---|---|---|
| 2 x 56 cm 22.0"<br>2 x 84 cm 33.1"<br>2 x 144 cm 56.7" | 1 x MDF 75x150 cm 29.5"x59.4"<br>1 x 40x150 cm 15.7"x59.4" | 3 x 150 cm 59.1" | 4 x<br>2 x 75 cm 29.5"<br>30 cm 11.8" | 1 x 150x30 cm 59.1"x11.8" | 8 x |
| 1 x<br>1 x 150 cm 59.1"<br>75 cm 29.5" | 2 x 30 cm 11.8" | 1 x 150 cm 59.1" | 2 x 75 cm 29.5" | 2 x 58 cm 22.8" | 1 x 35 kg (80 lb) 56x137 cm 22.0"x53.9" |

PRECAUCIÓN PRODUCTO PESADO · ATTENTION HEAVY PRODUCT · ACHTUNG! SCHWERES PRODUKT · ATTENTION PRODUIT LOURD

8 435104 932698

ESTANTERIAS SIMON S.L. B.50.556.463
PG. ALFAMEN C/ POLIGONO C. Nº3
ALFAMEN (ZARAGOZA)

Simon Rack
SINCE 1964 - MANUFACTURER

www.simonrack.com

PEFC · MADE IN SPAIN European Quality · EPOXY POLIESTER · EMPRESA CERTIFICADA EN SISTEMA DE GESTIÓN DE CALIDAD ISO 9001:2015

INSTRUCCIONES INSTRUCTIONS ANLEITUNG INSTRUCTIONS

Simon Rack
SINCE 1964 - MANUFACTURER

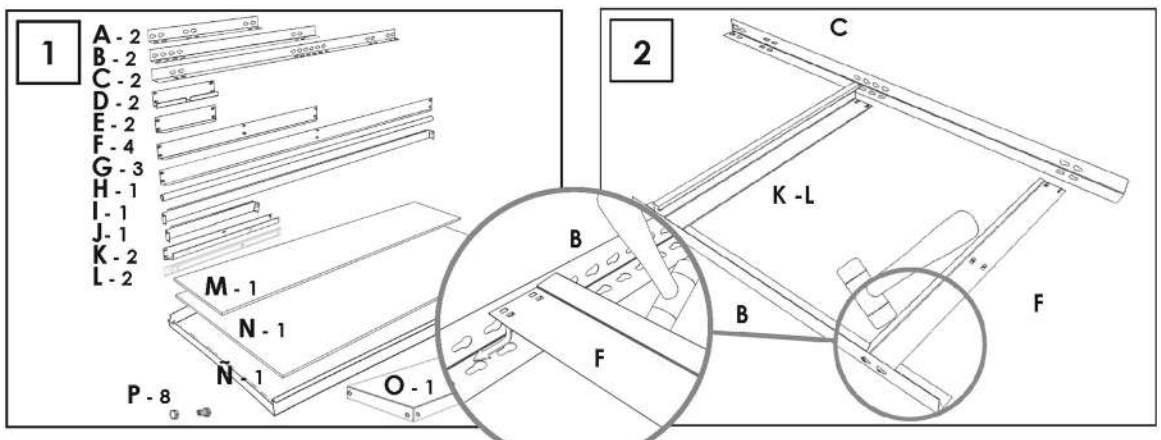





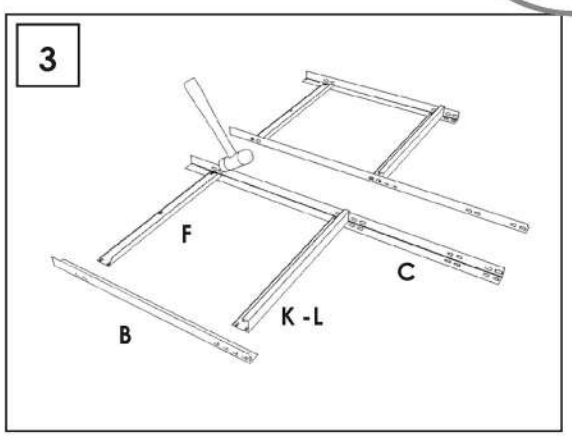


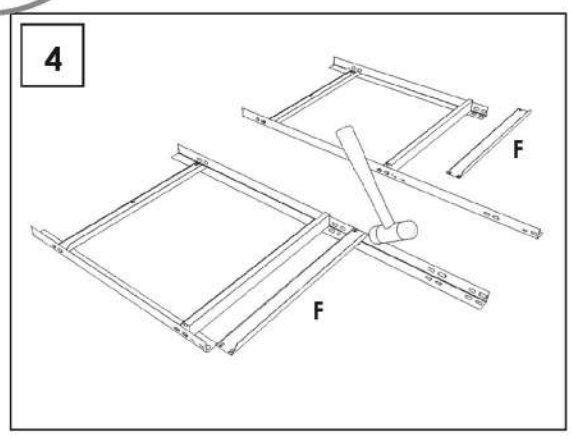


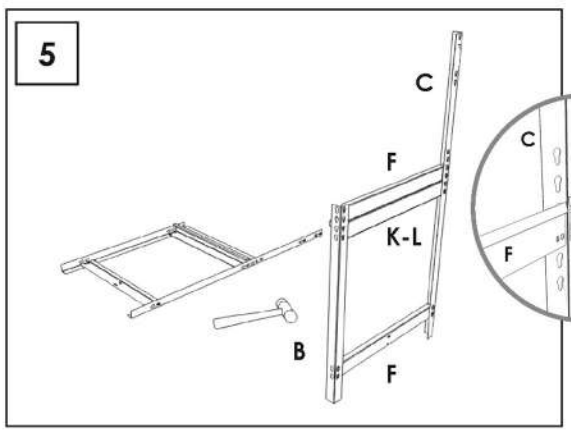


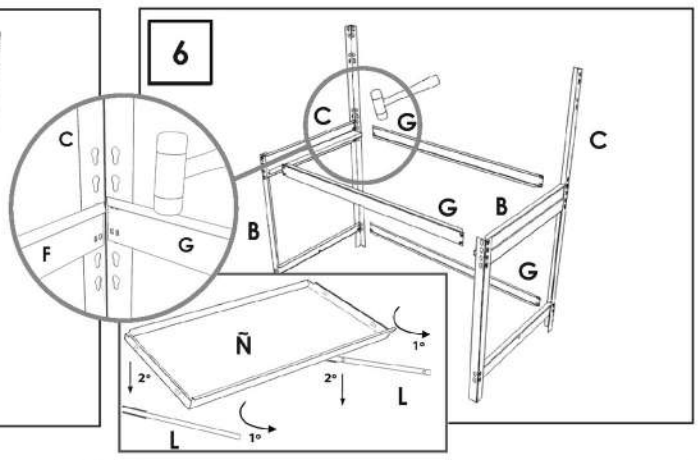


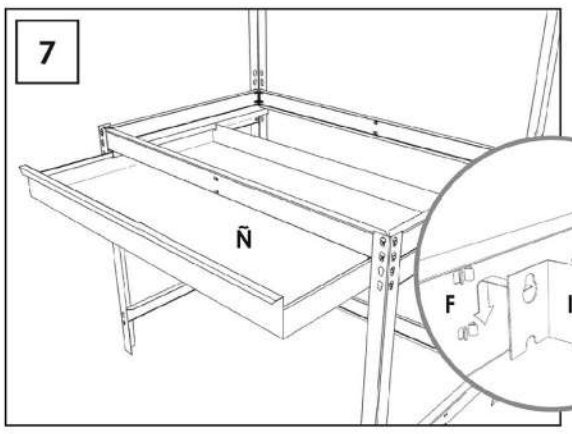


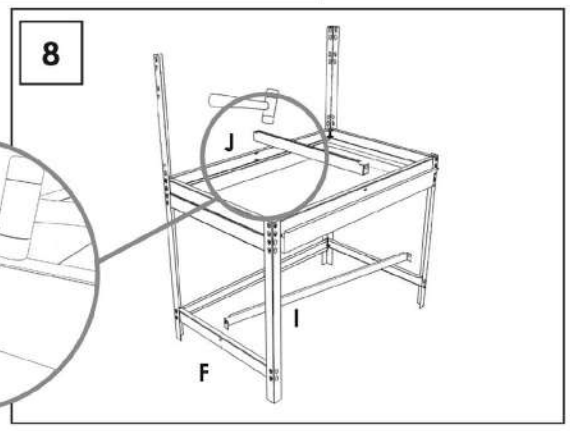


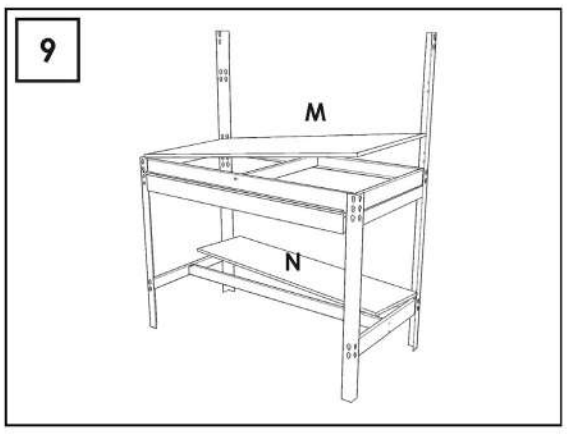


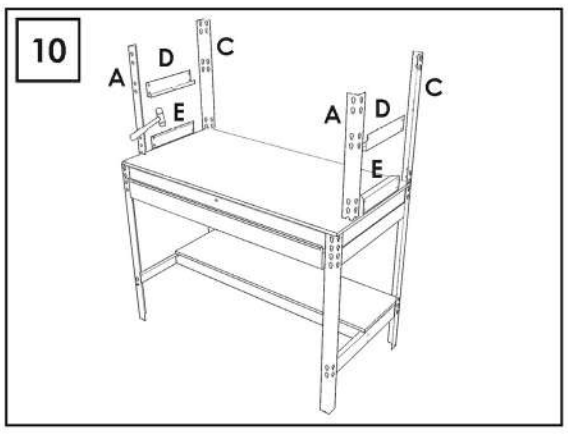


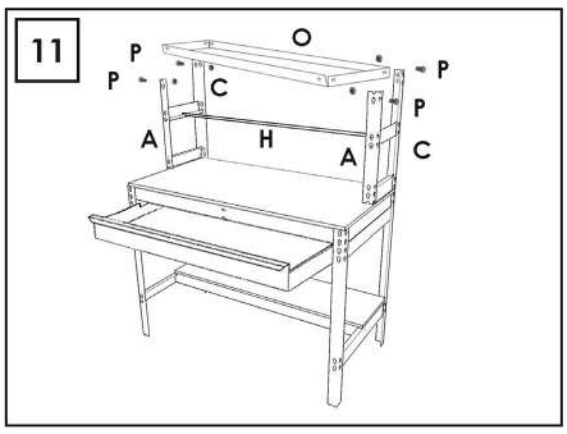


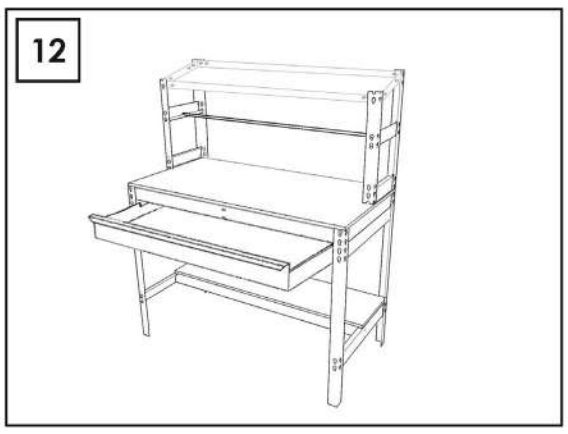


www.instructionsrack.com/bt4


www.simonrack.com • www.simonrack.com • www.simonrack.com • www.simonrack.com • www.simonrack.com • www.simonrack.com • www.simonrack.com • www.simonrack.com • www.simonrack.com • www.simonrack.com

SIMONCLASSIC
150 kg
350 lb

SIMONCLICK
400 kg
900 lb

SIMONTALLER
700 kg
1550 lb

SIMONAUTO
300 kg
660 lb

SIMONWORK
800 kg
1800 lb

SIMONLOCKER

SIMONOFFICE
275 kg
600 lb

SIMONHOME
150 kg
350 lb

SIMONGARDEN
600 kg
1350 lb

SIMONTITÁN
900 kg
1990 lb

SIMONINOX

SIMONINDUSTRIAL

SIMONPALET
4500 kg
9950 lb

SIMONLEVER

ALTILLOS Y PASILLOS ELEVADOS
PLATFORMS AND MEZZANINES
LAGERBÜHNEN • PLATES-FORMES ET MEZZANINES

* Kg / lb por bandeja con carga uniformemente repartida
Kg / lb per shelf uniformly distributed load
Kg / lb pro fach bei gleichmäßig verteilter last
Kg / lb par plateau avec charge uniformément répartie