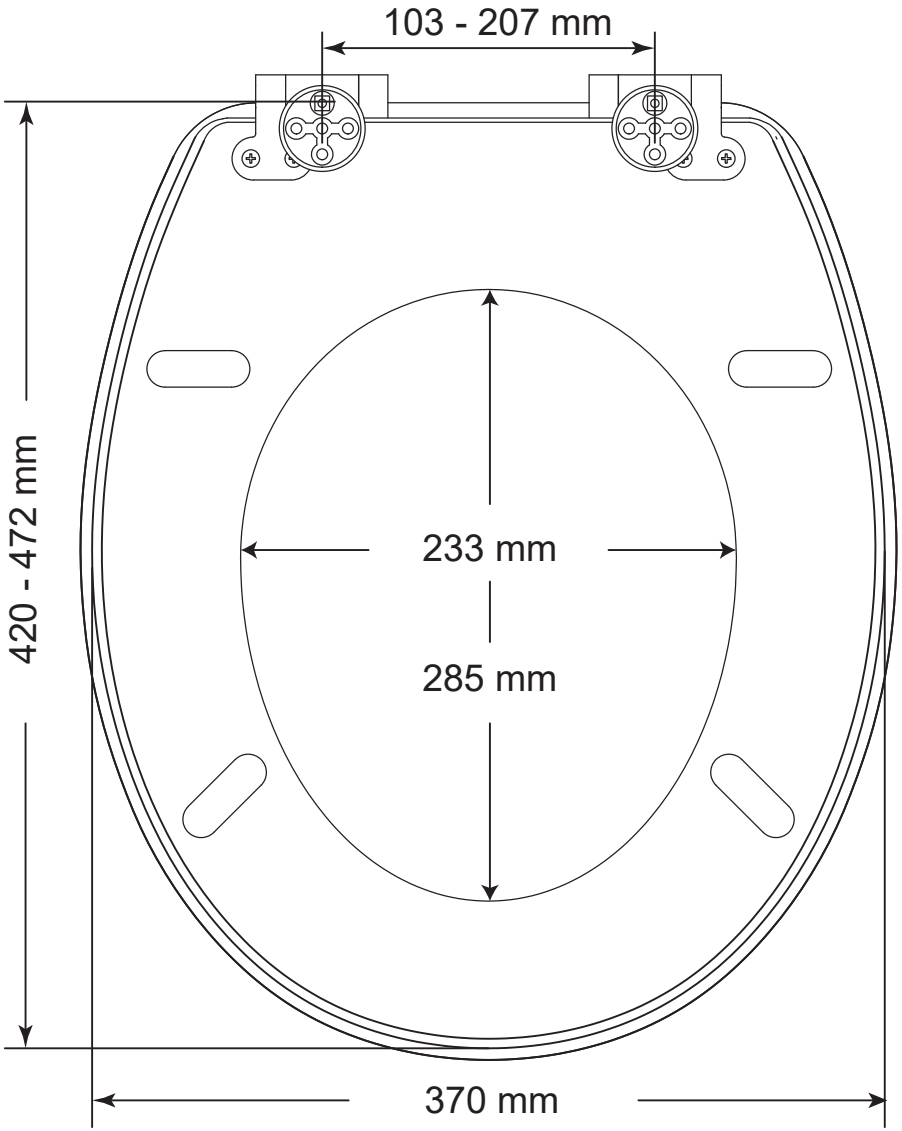
103 - 207 mm
420 - 472 mm
233 mm
285 mm
370 mm

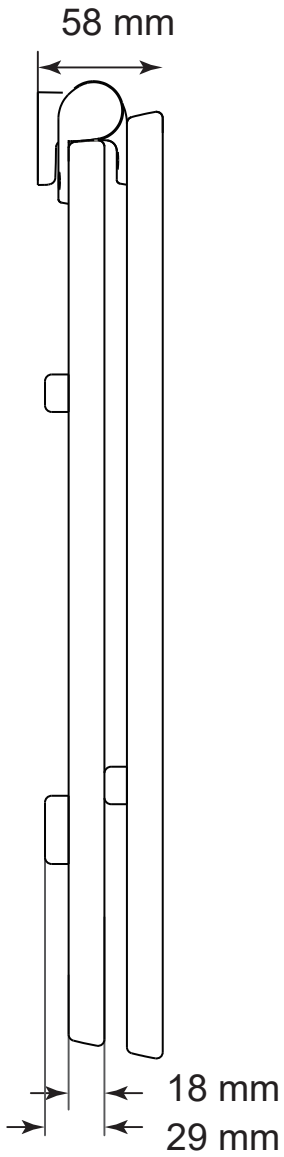
58 mm
18 mm
29 mm