QA317

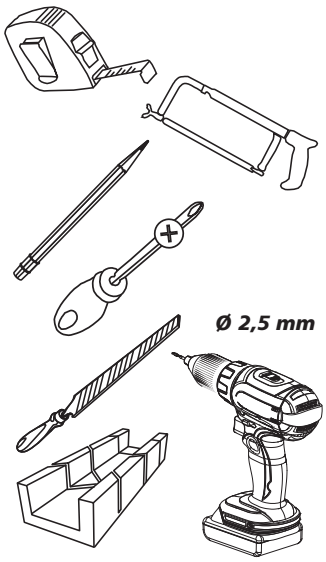
Ø 2,5 mm

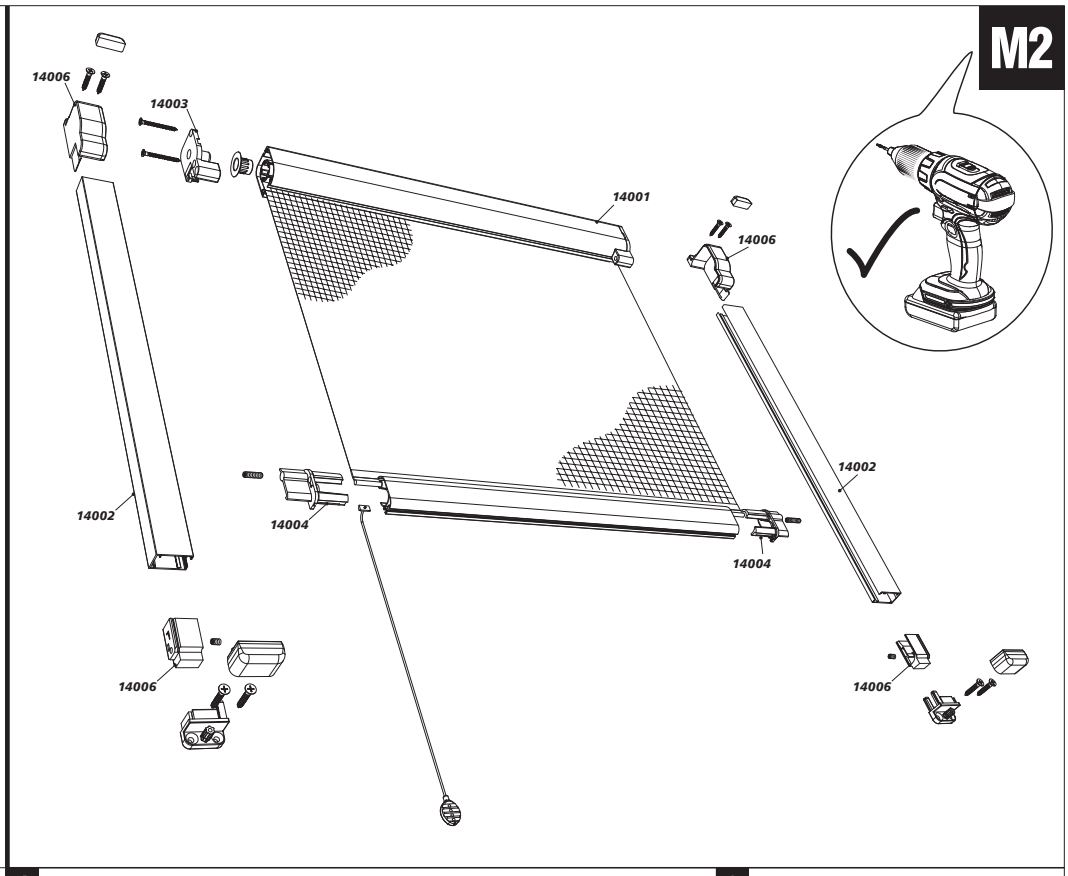
M2
14006
14003
14001
14006
14002
14004
14004
14002
14006
14006

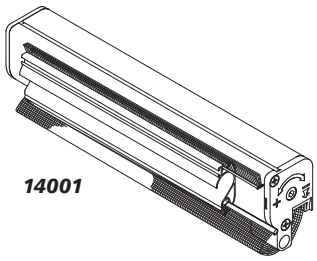
14001

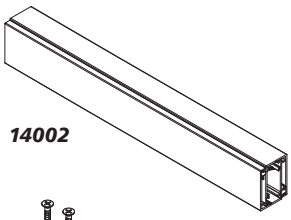
14002

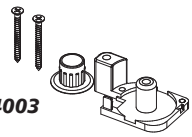
14003

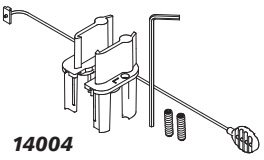
14004

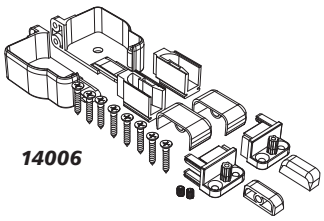
14006

1

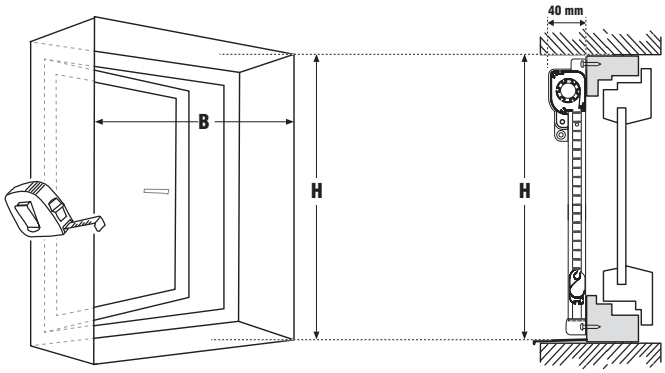
40 mm
B
H
H

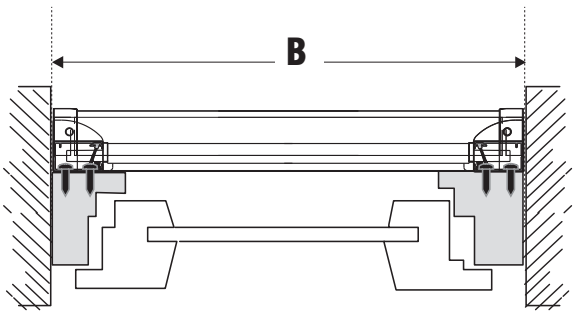
B

2

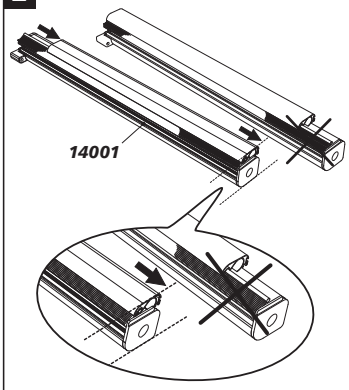
14001

3

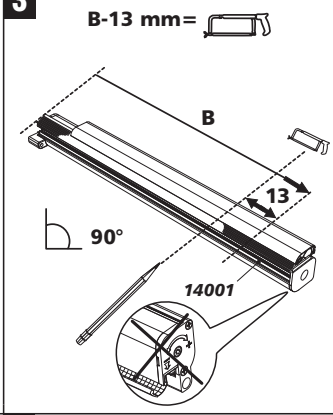
B-13 mm=
B
13
90°
14001

4

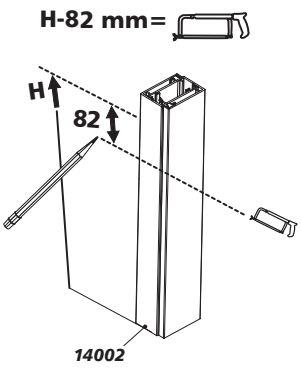
H-82 mm=
H
82
14002

5

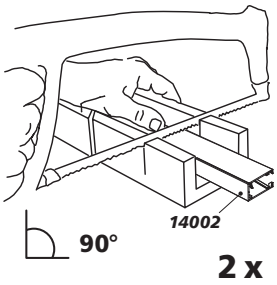
14002
90°
2 x

6

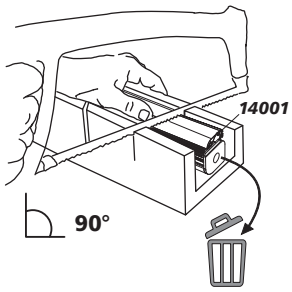
14001
90°

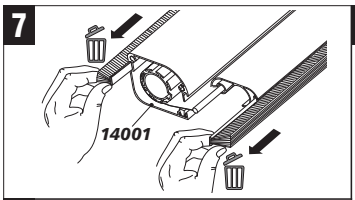
7
14001

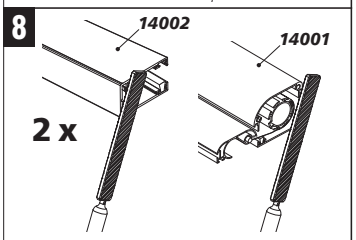
8
14002
14001
2 x

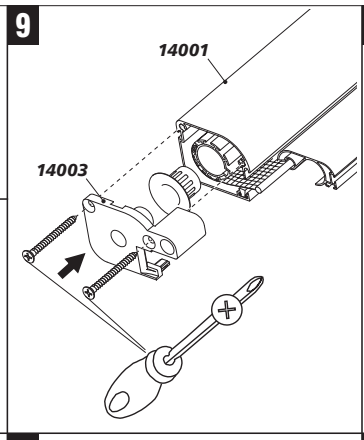
9
14001
14003

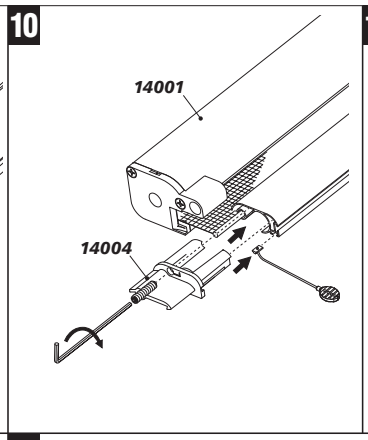
10
14001
14004

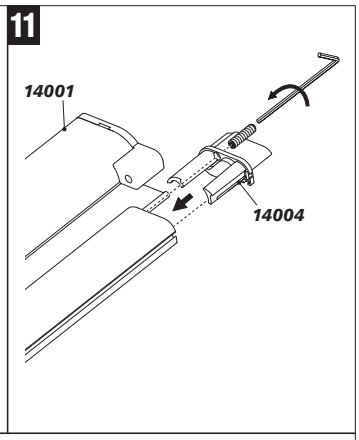
11
14001
14004

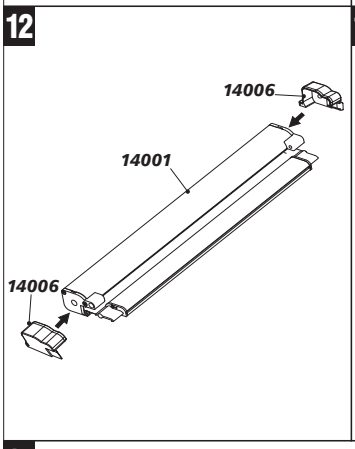
12
14006
14001
14006

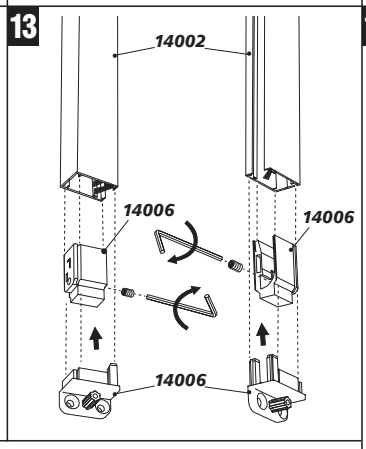
13
14002
14006
14006
14006

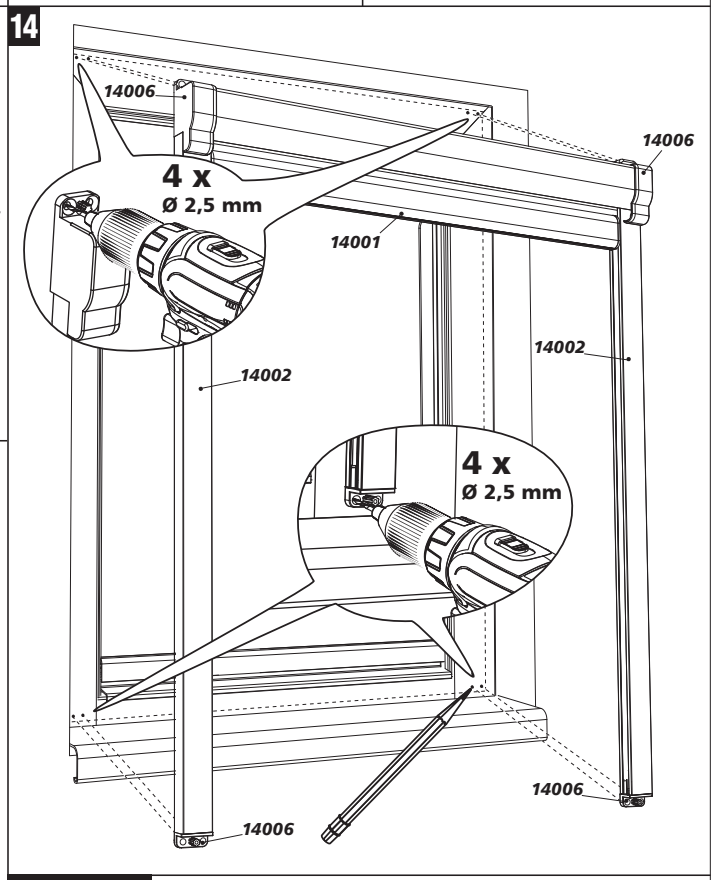
14
14006
4 x
Ø 2,5 mm
14006
14001
14002
14002
4 x
Ø 2,5 mm
14006
14006

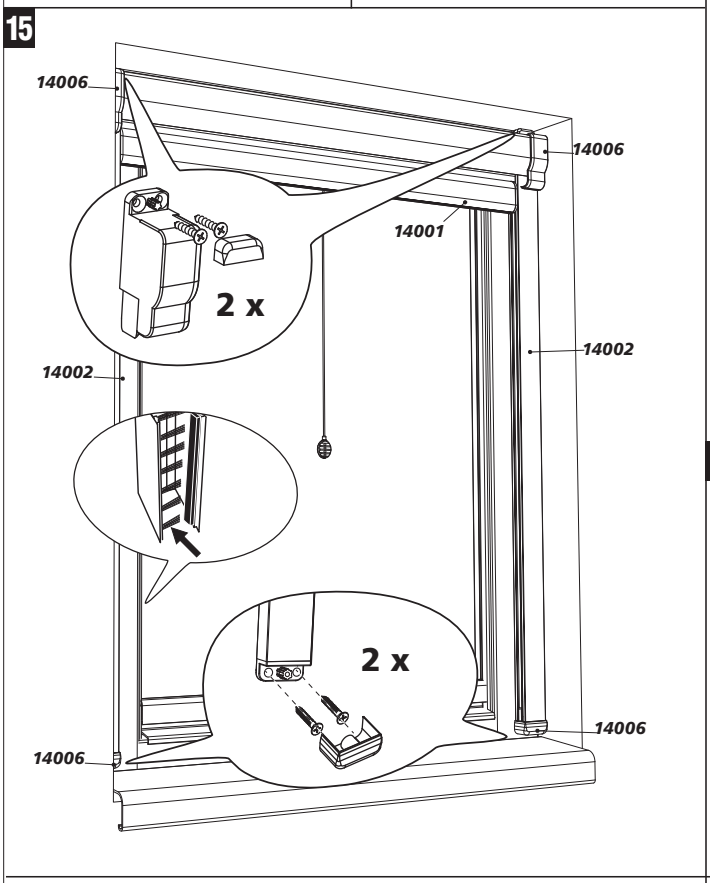
15
14006
14006
14001
2 x
14002
14002
2 x
14006
14006

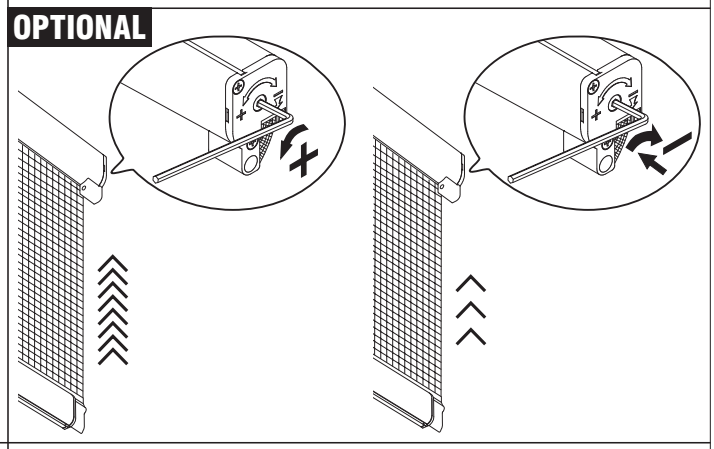
OPTIONAL

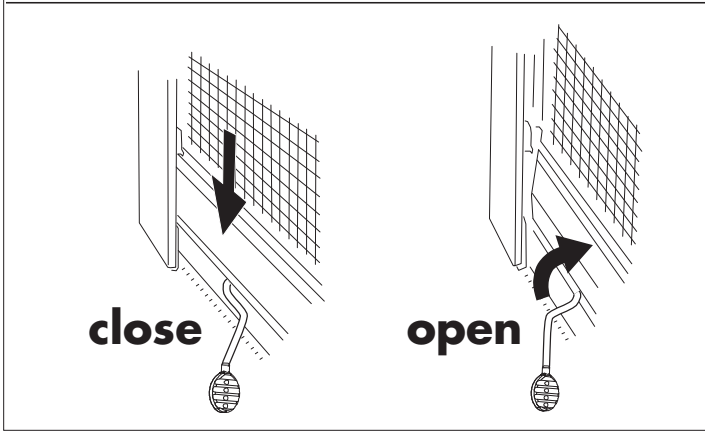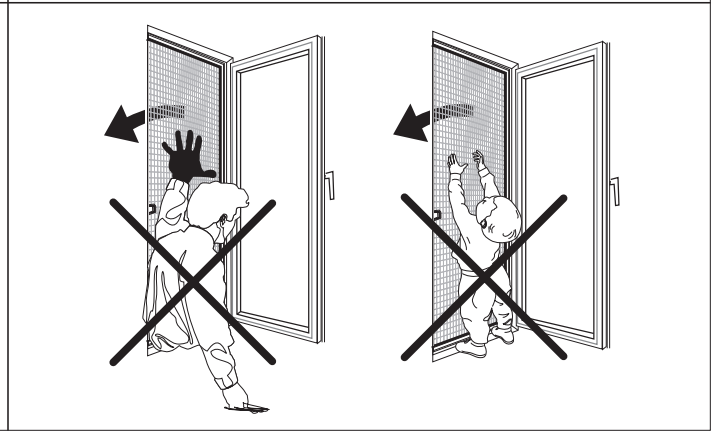
close
open