200L with solar

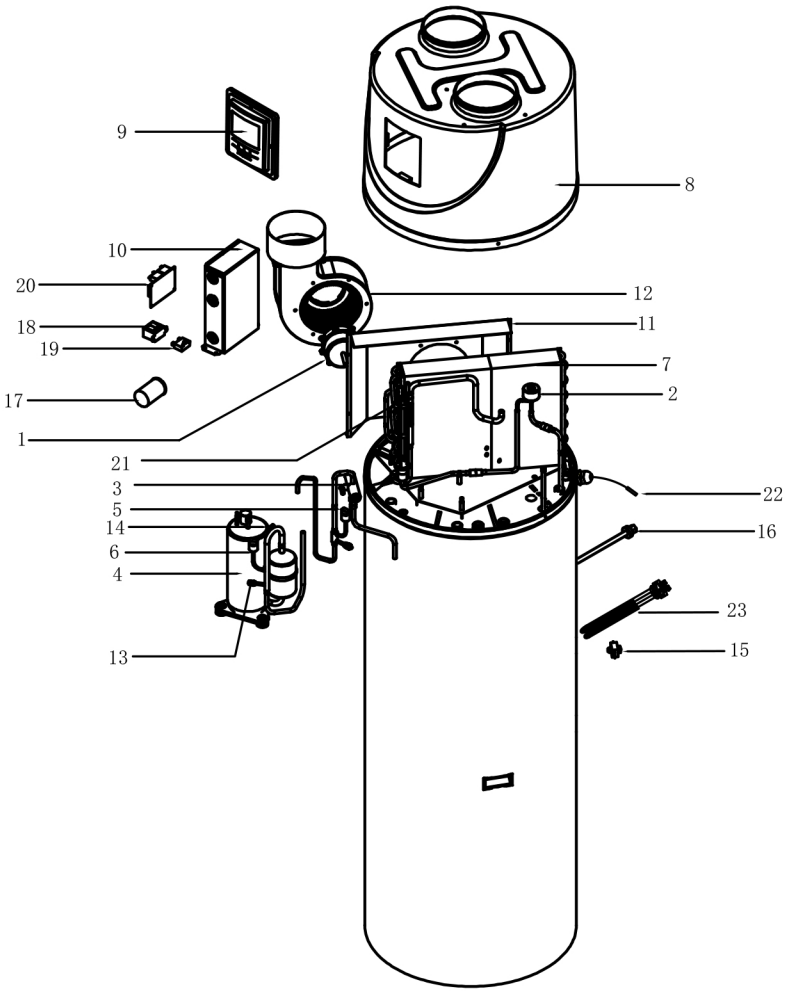

S/N	Code	Name
1	D0040079	Fan
2	C0050014	Electronic expansion valve
3	C0050001	4-way valve
4	D0020119	Compressor
5	C0080006	High pressure switch
6	C0080003	Low pressure switch
7	D0010274	Evaporator
8	H0070057	Top cover
9	G0010087	Control panel
10	A0050114	Eletric control box
11	A0180021	Fan plate
12	A0210002	Fan casing
13	C0080001	Needle valve
14	G0030153	Temperature sensor
15	G0120002	Temperature control switch
16	D0100001	Magnesium
17	G0050013	Compressor capacitor
18	G0040001	Transformer
19	G0060002	Fan capacitor
20	G0010086	PCB
21	G0030152	Temperature sensor
22	G0030208	Temperature sensor
23	D0090005	Electrical heater