QA306

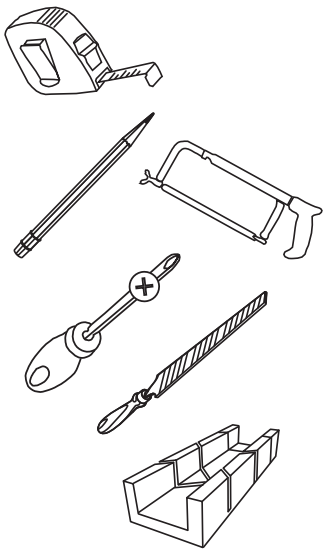

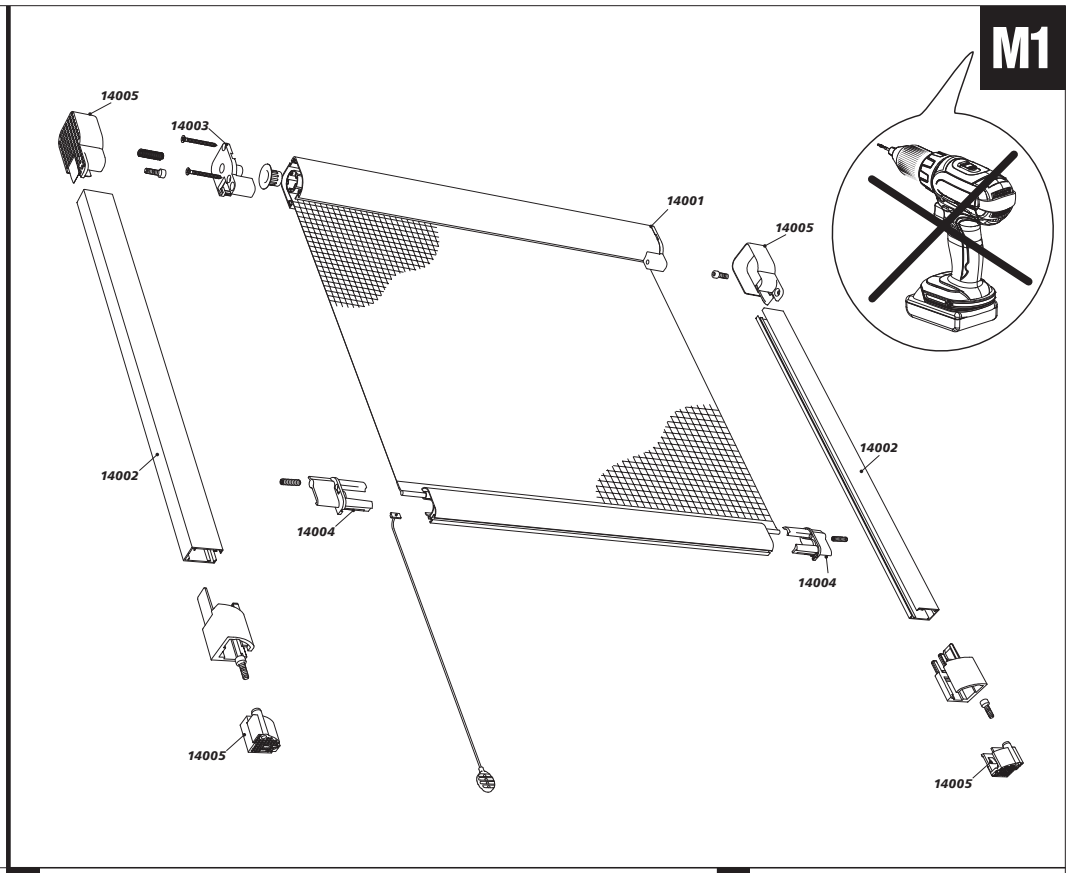
M1
14005
14003
14001
14005
14002
14002
14004
14004
14005
14005

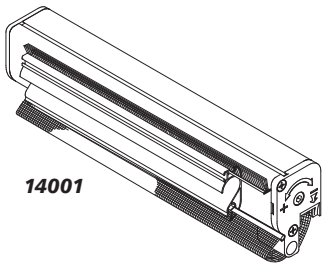
14001

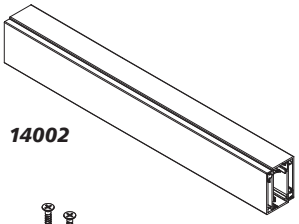
14002

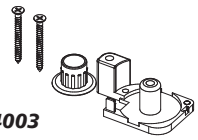
14003

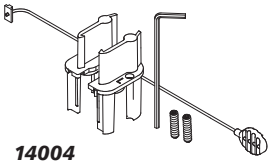
14004

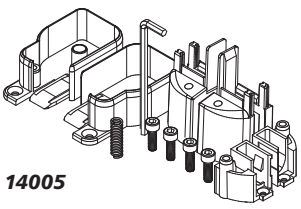
14005

1

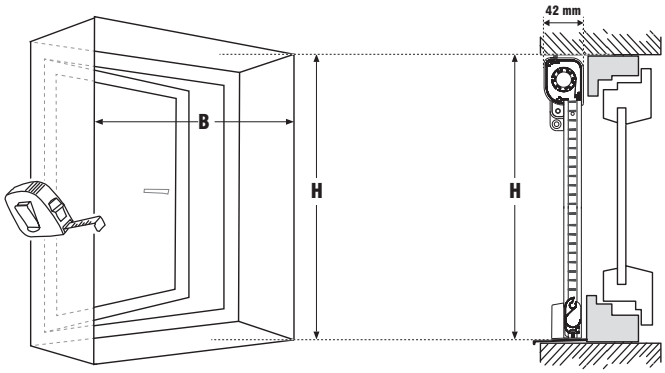
42 mm
B
H
H

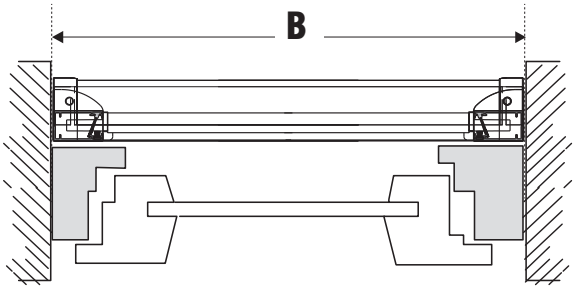
B

2

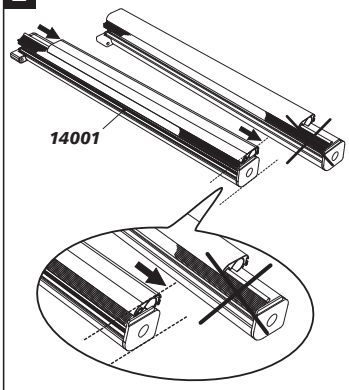
14001

3

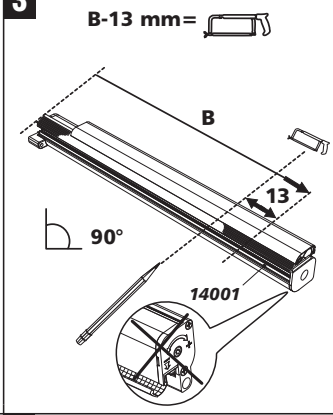
B-13 mm=
B
13
90°
14001

4

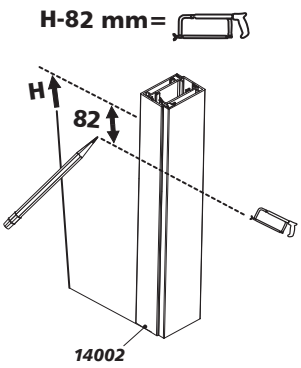
H-82 mm=
H
82
14002

5

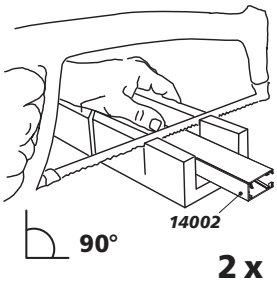
14002
90°
2 x

6

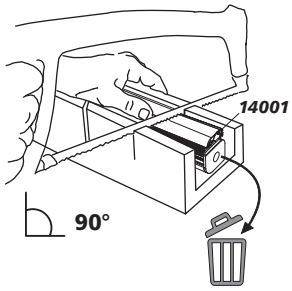
14001
90°

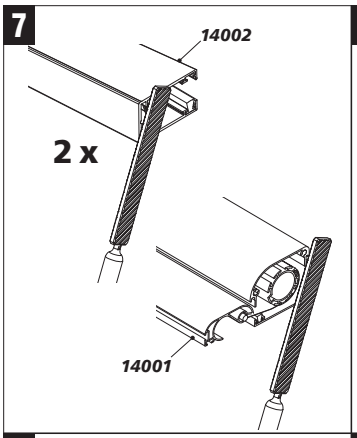
7
14002
2 x
14001

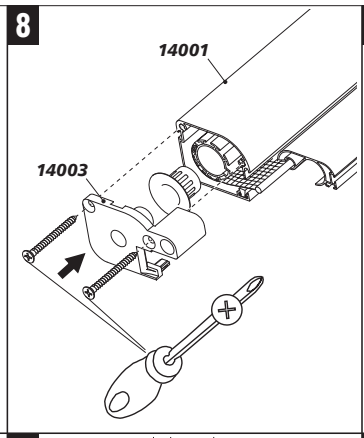
8
14001
14003

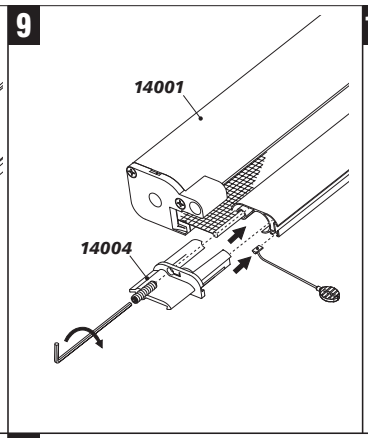
9
14001
14004

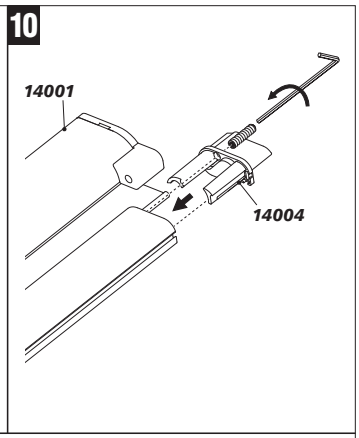
10
14001
14004

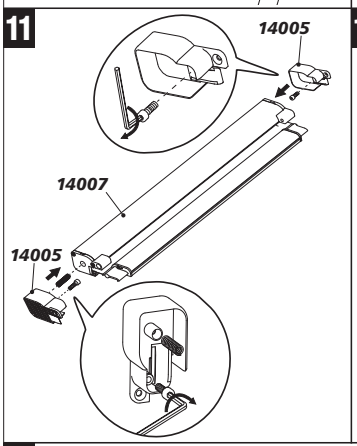
11
14005
14007
14005

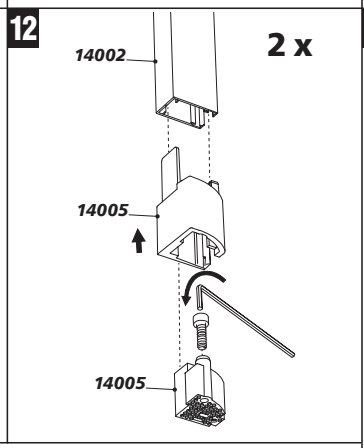
12
14002
2 x
14005
14005

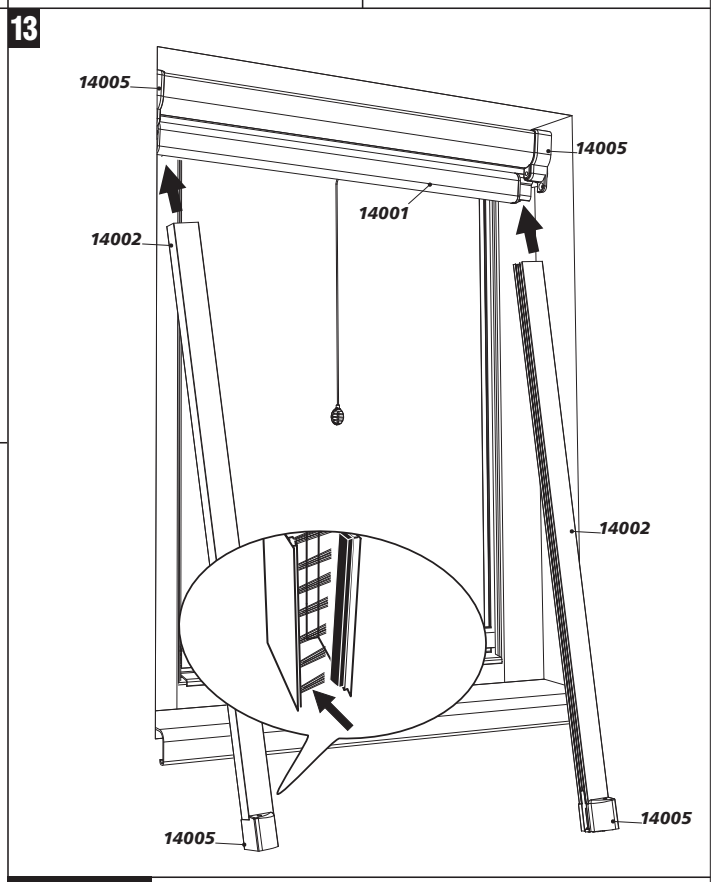
13
14005
14005
14001
14002
14002
14005
14005

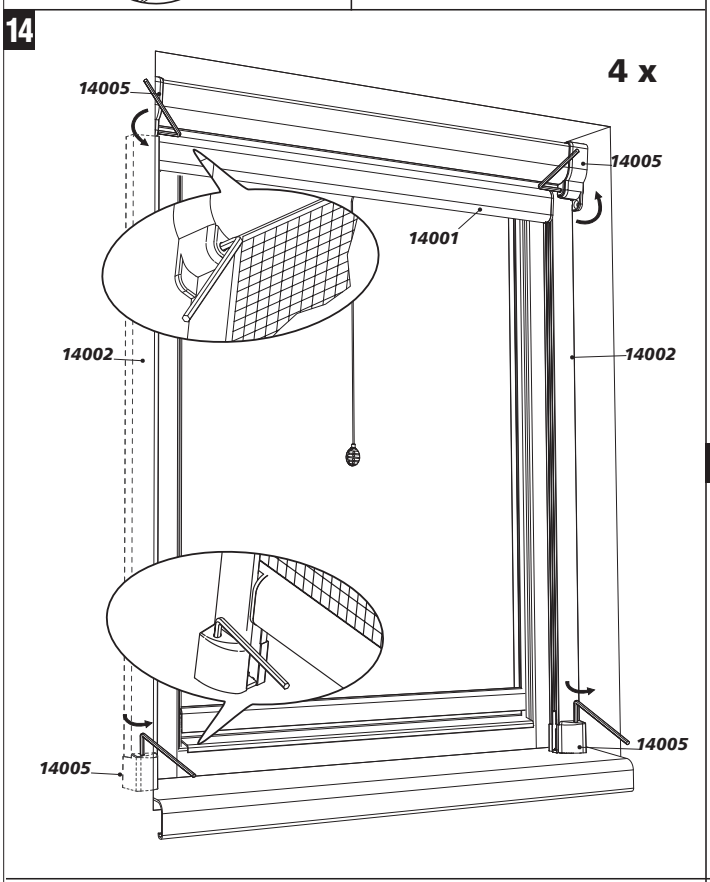
14
4 x
14005
14005
14001
14002
14002
14005
14005

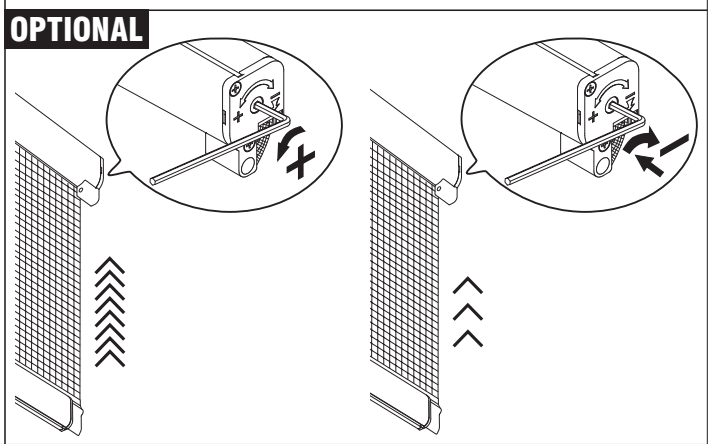
OPTIONAL

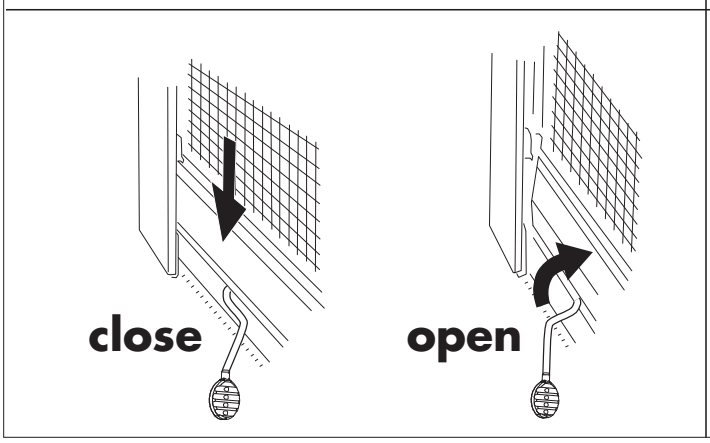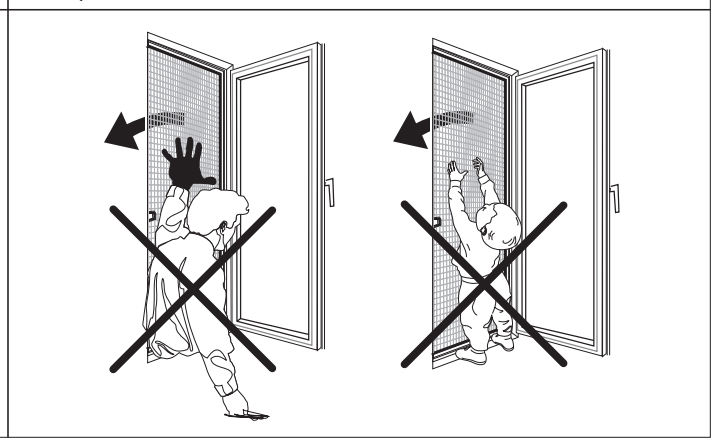
close
open