# SIMONWORK BT3 BOX 1500

## 144,5 x 151 x 61 cm
## 56.9" x 59.4" x 24.0"

Simon Rack
SINCE 1964 - MANUFACTURER

8 425437 138287

ESTANTERIAS SIMON S.L. B.50.556.463
PG. ALFAMEN C/ POLIGONO C. Nº3
ALFAMEN (ZARAGOZA)

www.simonrack.com

MADE IN SPAIN European Quality

EPOXY POLIESTER

EMPRESA CERTIFICADA EN SISTEMA DE GESTIÓN DE CALIDAD ISO 9001:2015

INSTRUCCIONES INSTRUCTIONS ANLEITUNG INSTRUCTIONS

Simon Rack
SINCE 1964 - MANUFACTURER

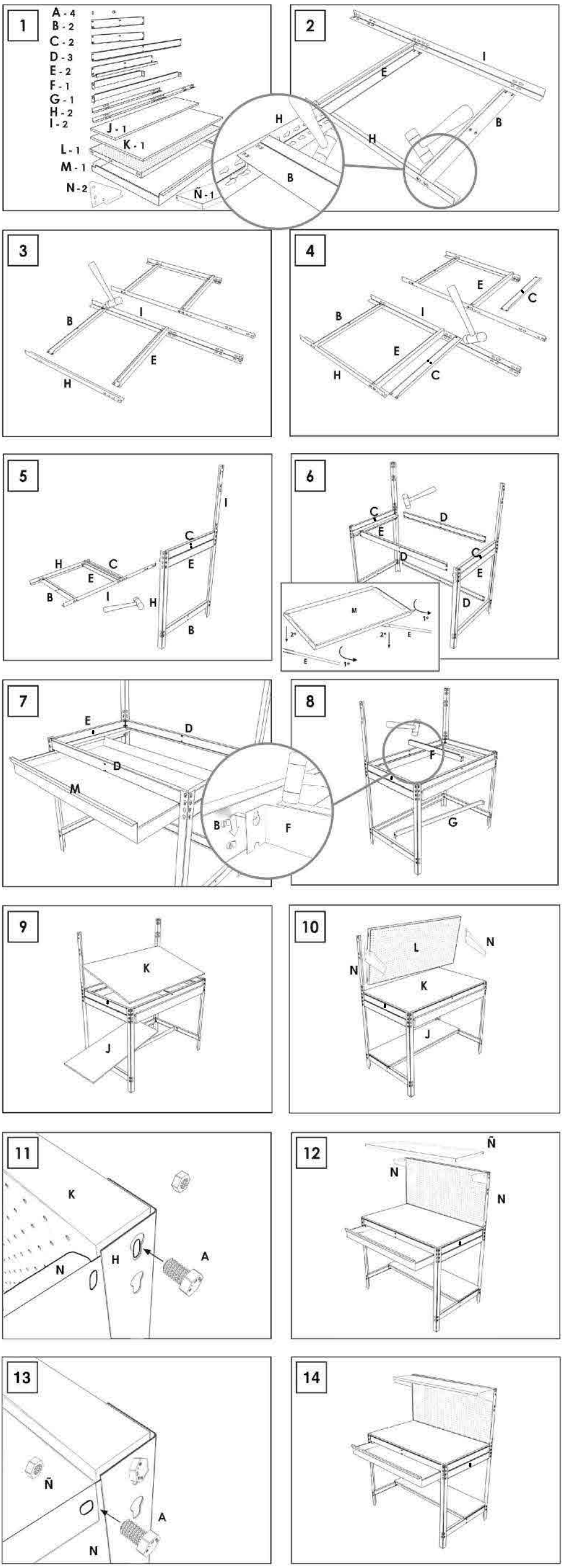


www.instructionsrack.com/bt3box

www.simonrack.com • www.simonrack.com • www.simonrack.com • www.simonrack.com • www.simonrack.com • www.simonrack.com • www.simonrack.com • www.simonrack.com • www.simonrack.com • www.simonrack.com

SIMONCLASSIC

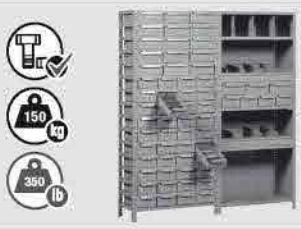


SIMONCLICK

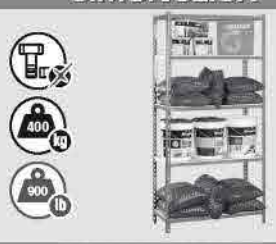


SIMONTALLER

SIMONAUTO

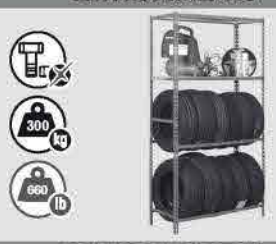


SIMONWORK

SIMONLOCKER

SIMONOFFICE

SIMONHOME

SIMONGARDEN

SIMONTITAN

SIMONINOX

SIMONINDUSTRIAL

SIMONPALET

SIMONLEVER

ALTILLOS Y PASILLOS ELEVADOS
PLATFORMS AND MEZZANINES
LAGERBÜHNEN • PLATES-FORMES ET MEZZANINES

* Kg / lb por bandeja con carga uniformemente repartida
Kg / lb per shelf uniformly distributed load
Kg / lb pro fach bei gleichmäßig verteilter last
Kg / lb par plateau avec charge uniformément répartie

Simon Rack
SINCE 1964 - MANUFACTURER

# BOX BT0-BT5

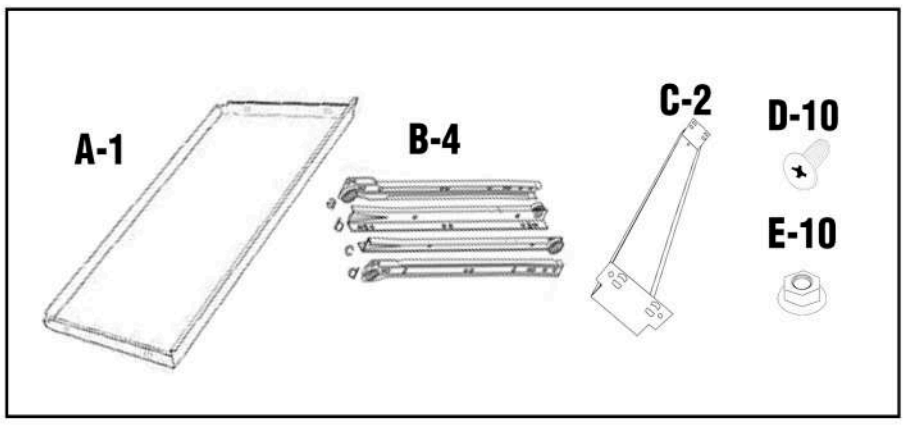


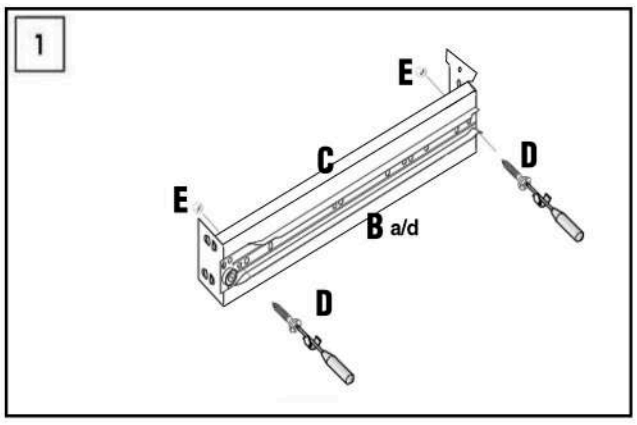


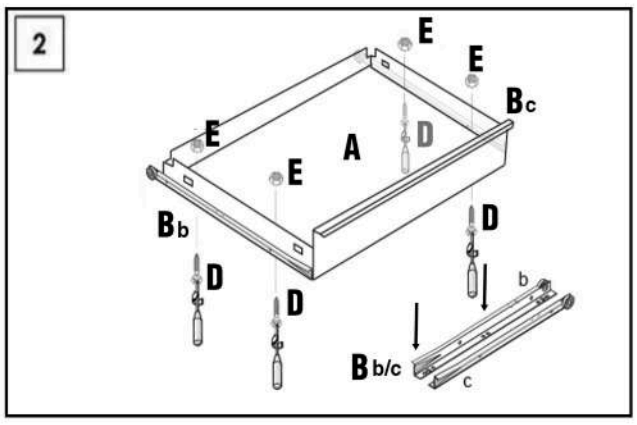


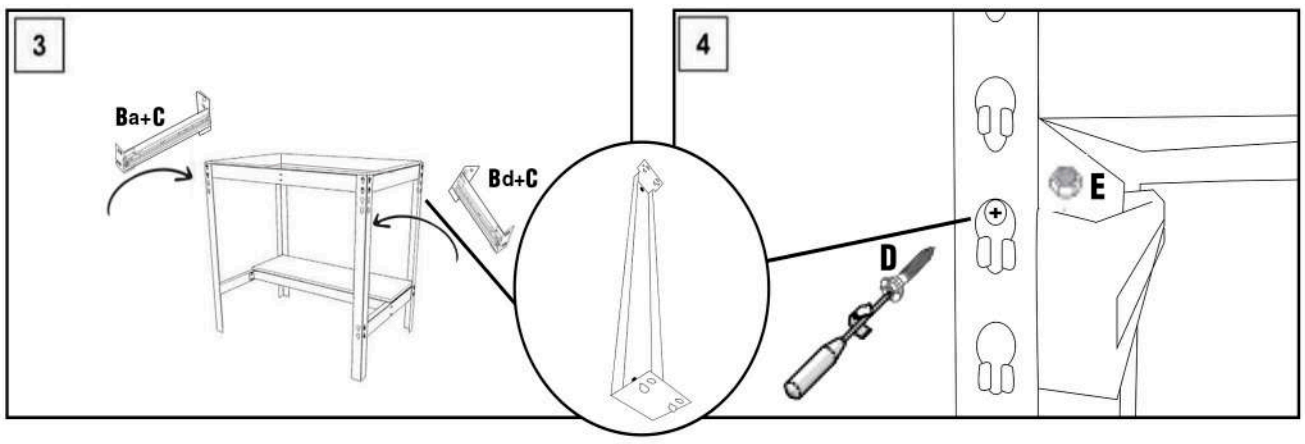


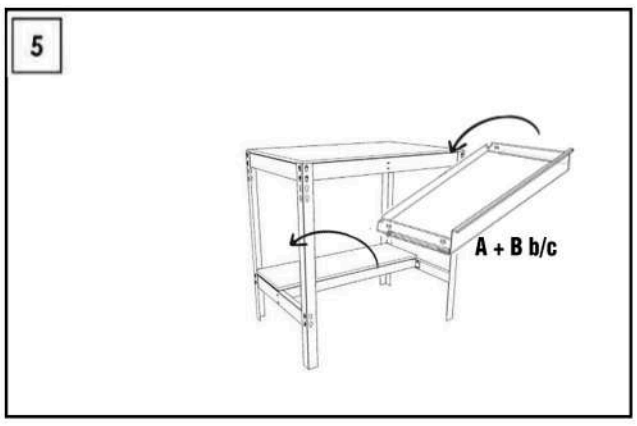


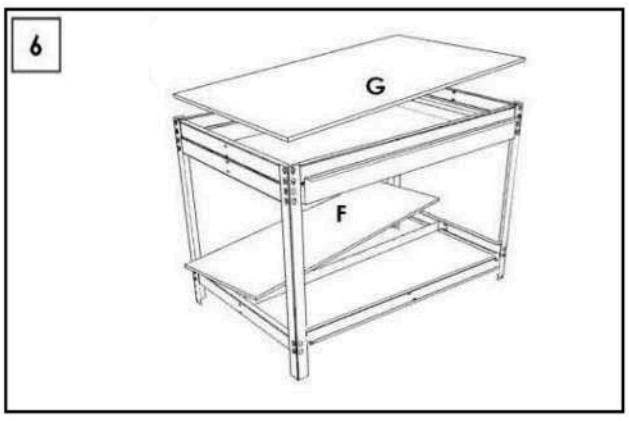


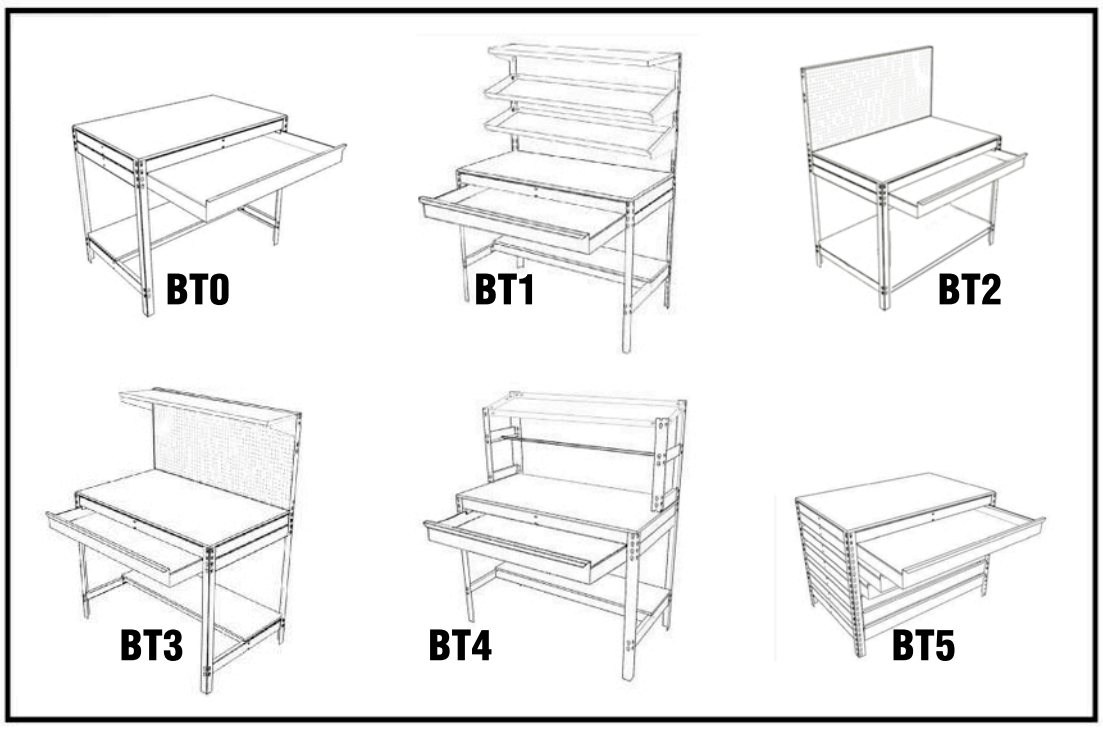


www.instructionsrack.com/bt0box


www.simonrack.com • www.simonrack.com • www.simonrack.com • www.simonrack.com • www.simonrack.com • www.simonrack.com • www.simonrack.com • www.simonrack.com

SIMONCLASSIC

SIMONCLICK

SIMONTALLER

SIMONAUTO

SIMONWORK

SIMONLOCKER

SIMONOFFICE

SIMONHOME

SIMONGARDEN

SIMONTITÁN

SIMONINOX


SIMONINDUSTRIAL
SIMONPALET
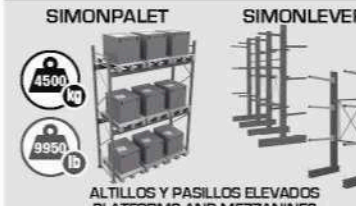


SIMONLEVER


ALTILLOS Y PASILLOS ELEVADOS
PLATFORMS AND MEZZANINES
LAGERBÜHNEN • PLATES-FORMES ET MEZZANINES

* Kg / lb por bandeja con carga uniformemente repartida
Kg / lb per shelf uniformly distributed load
Kg / lb pro fach bei gleichmäßig verteilter last
Kg / lb par plateau avec charge uniformément répartie