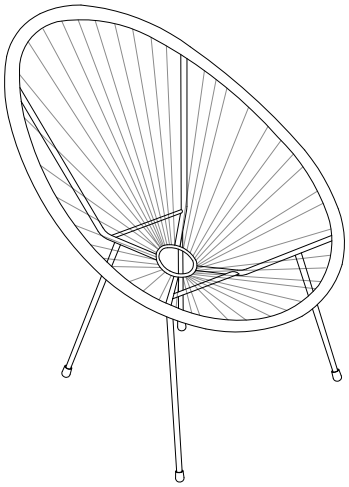

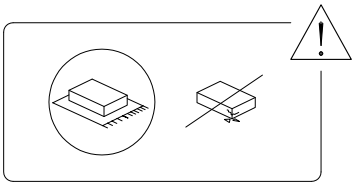



10'



1

1/3

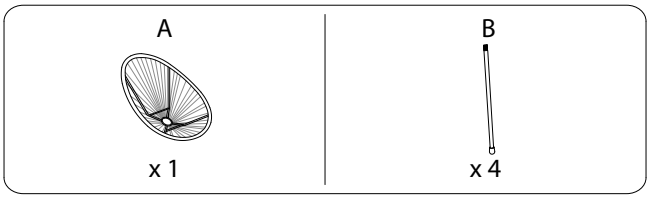

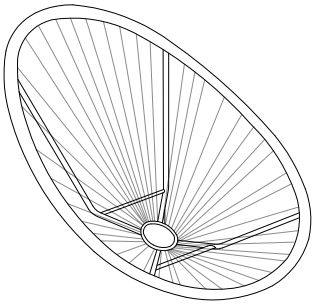

A

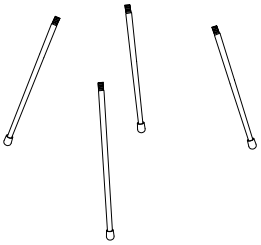

B x 4

2/3

1

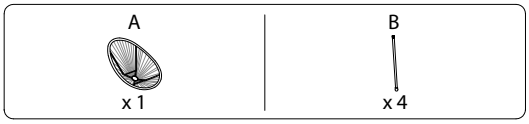

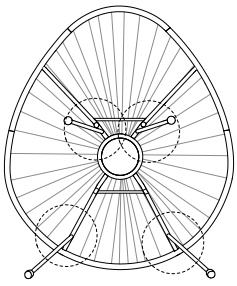

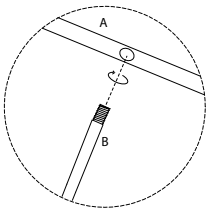

3/3