BELLARIVA

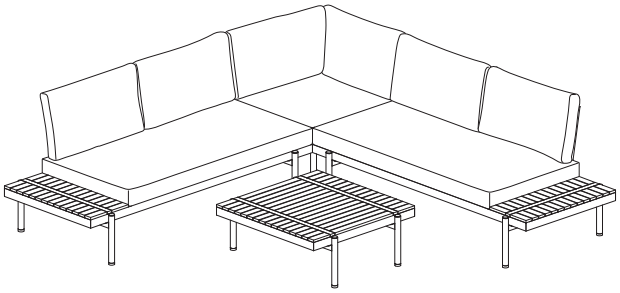

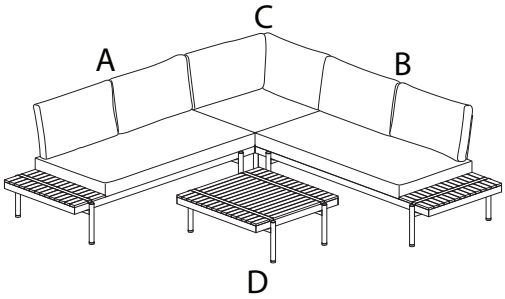

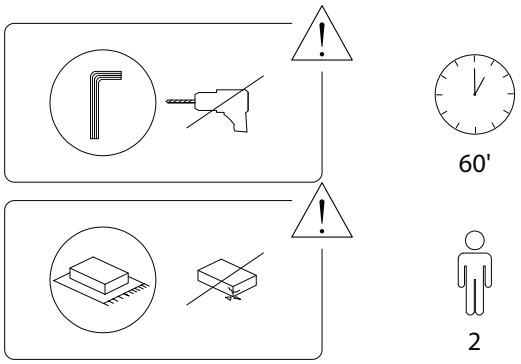

A

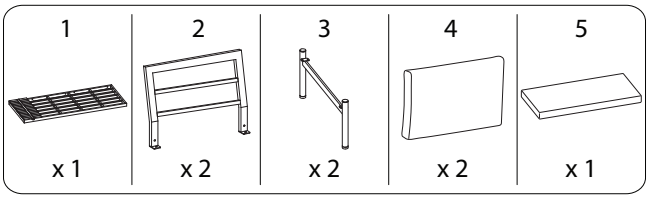

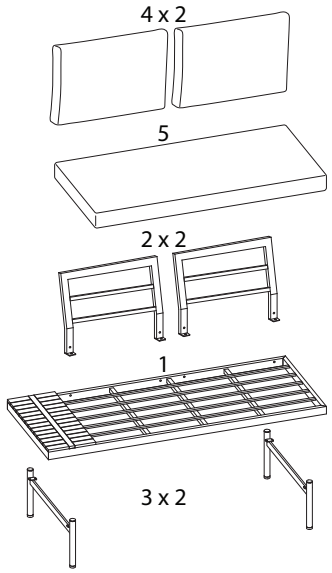

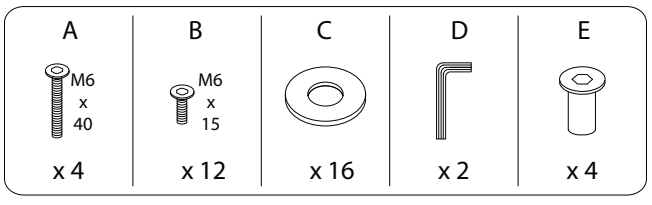

1

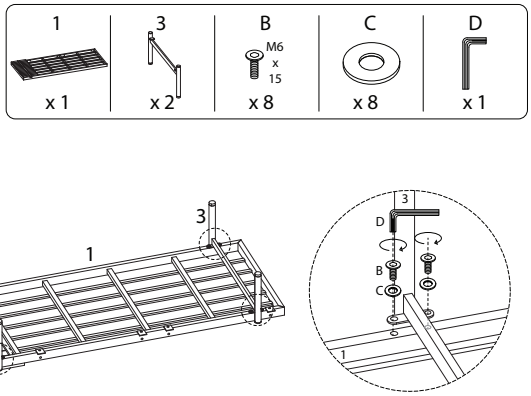

2

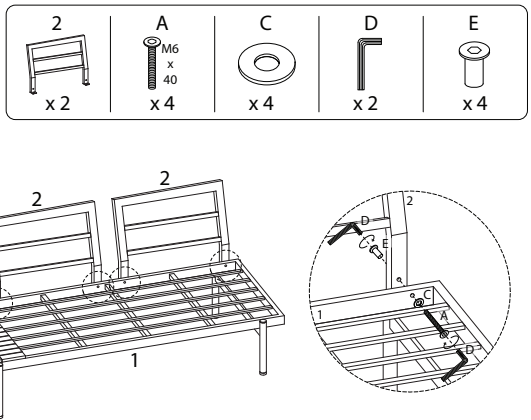

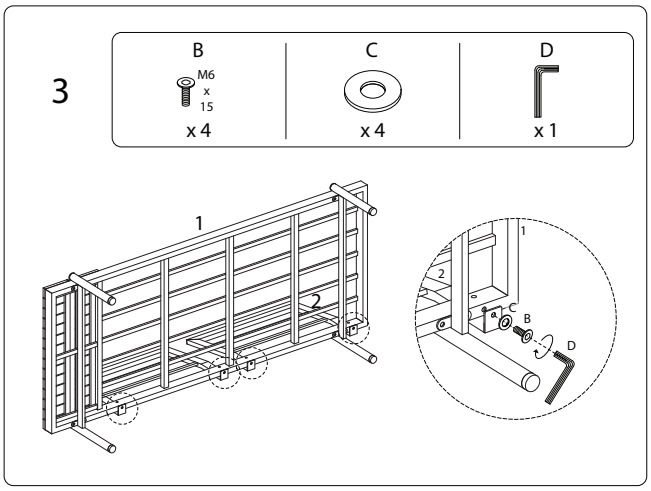
3
B
M6 x 15
x 4
C
x 4
D
x 1
1
2
B
D

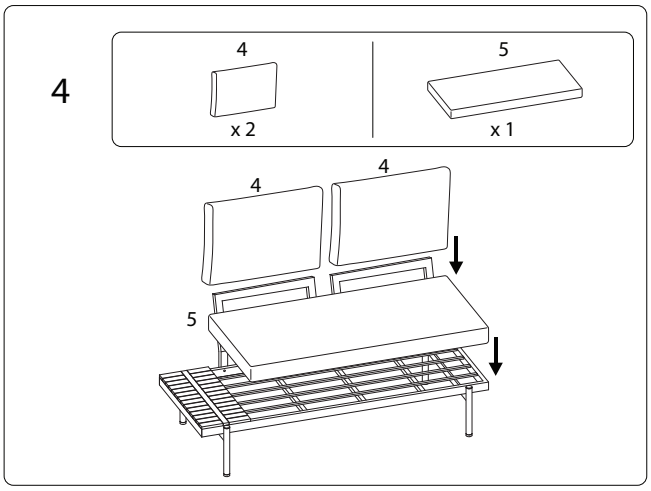
4
4
x 2
5
x 1
4
4
5

B

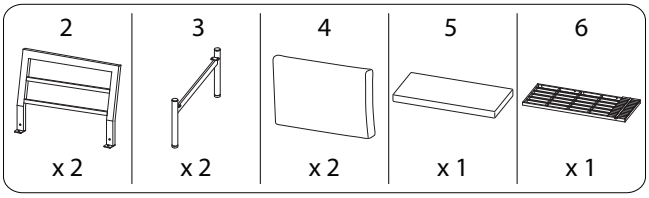
2
x 2
3
x 2
4
x 2
5
x 1
6
x 1

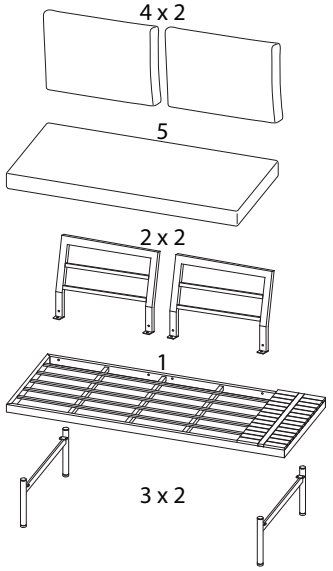
4 x 2
5
2 x 2
1
3 x 2

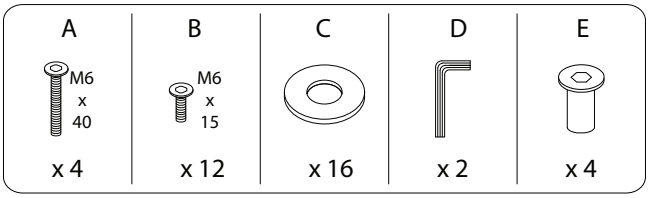
A
M6 x 40
x 4
B
M6 x 15
x 12
C
x 16
D
x 2
E
x 4

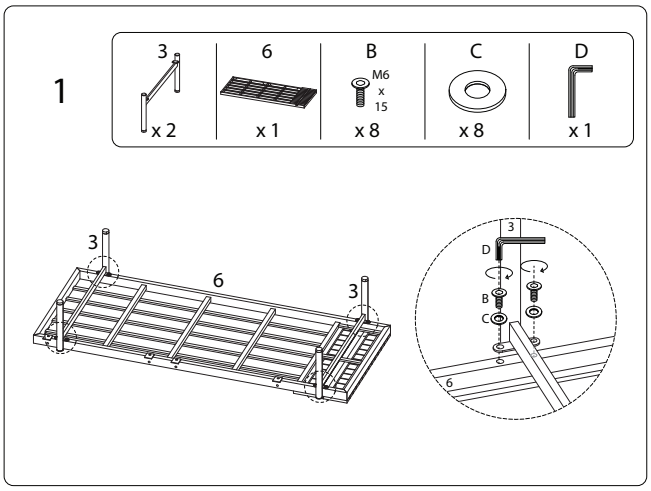
1
3
x 2
6
x 1
B
M6 x 15
x 8
C
x 8
D
x 1
3
6
3
D
B
C
6

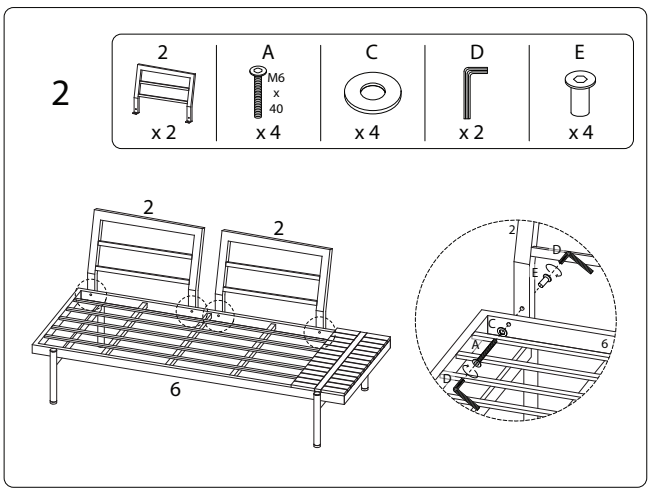
2
x 2
A
M6 x 40
x 4
C
x 4
D
x 2
E
x 4
2
2
6
2
D
E
C
A
6
D

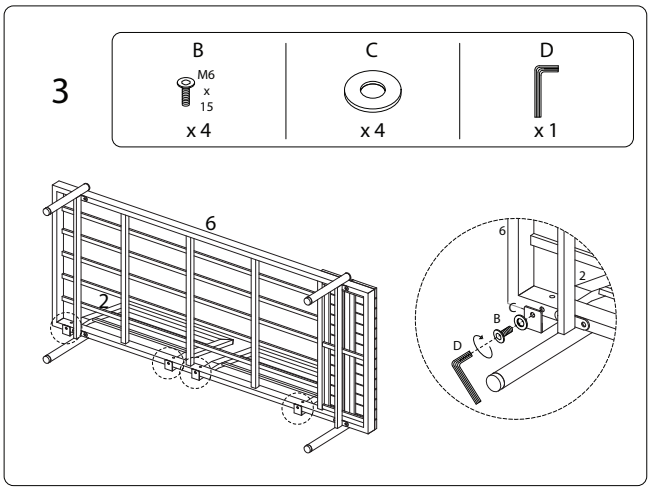
3
B
M6 x 15
x 4
C
x 4
D
x 1
6
2
6
2
C
B
D

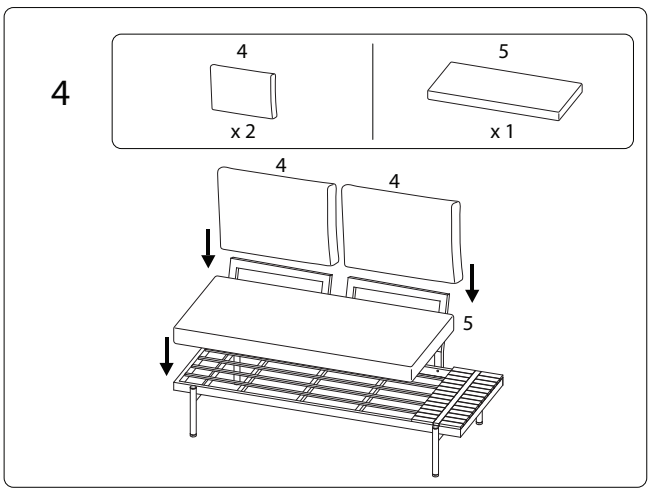
4
x 2
5
x 1
4
4
5

C

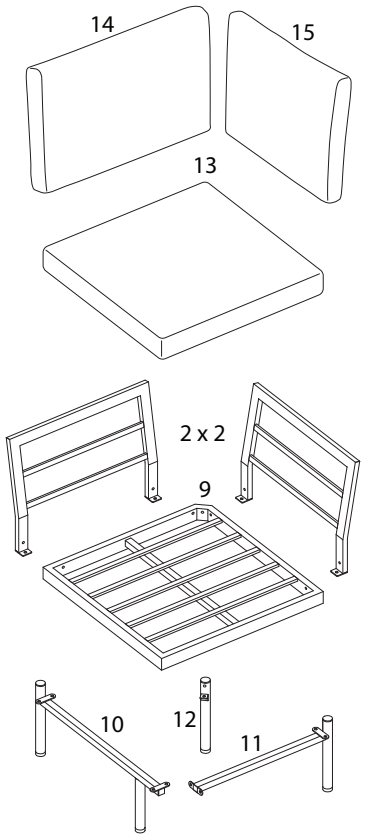

1085/BELLARIVA/280824/

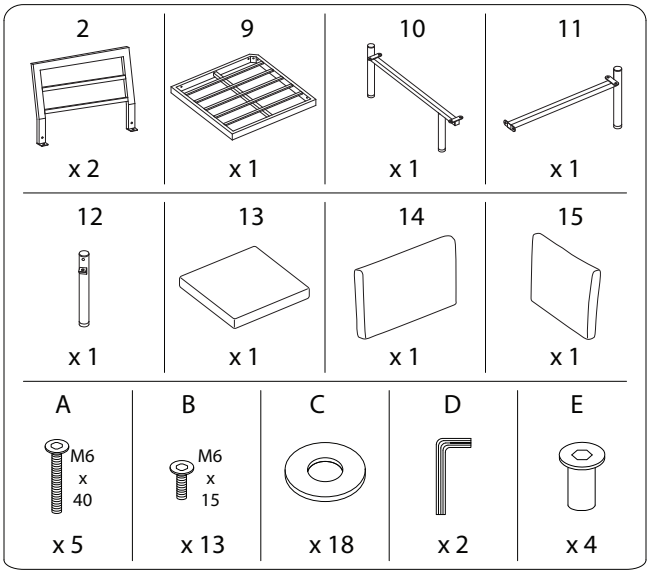

1085/BELLARIVA/280824/

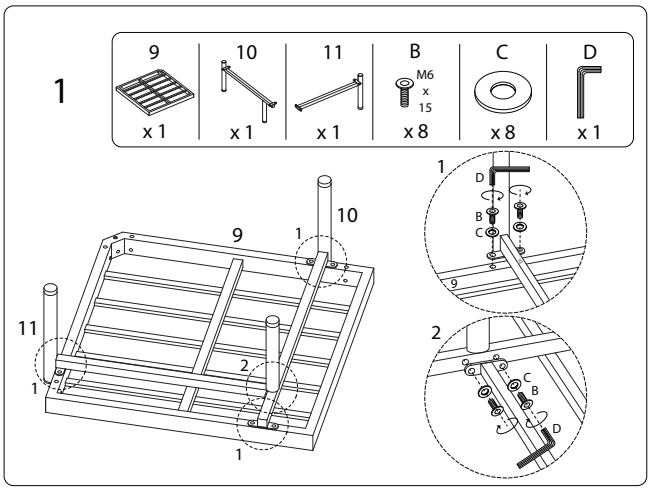

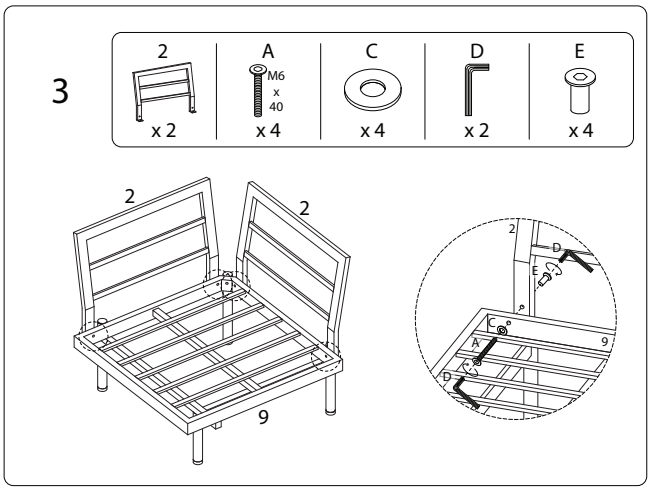

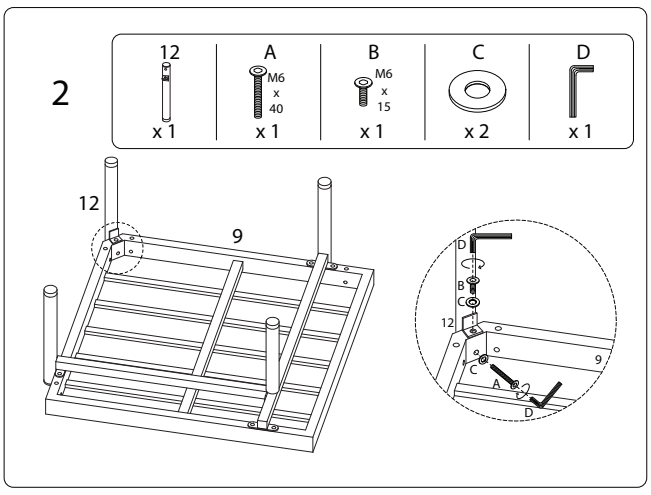

1085/BELLARIVA/280824/

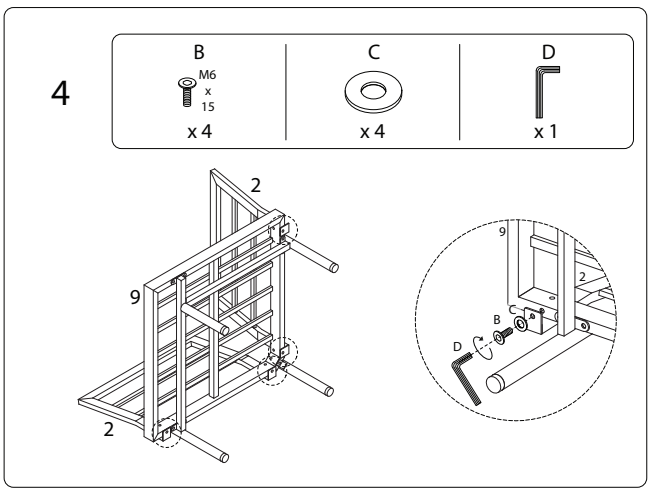

1085/BELLARIVA/280824/

5

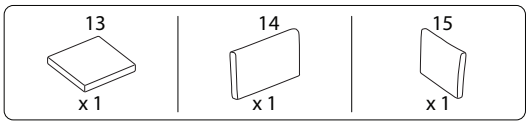

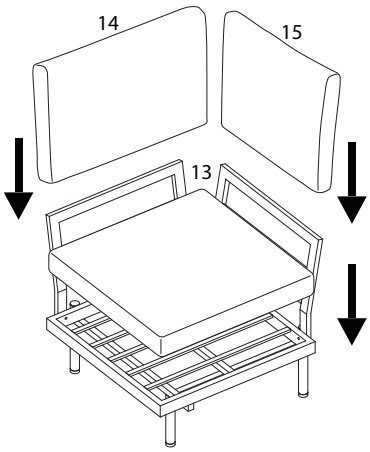

12/14

1085/BELLARIVA/280824/

D

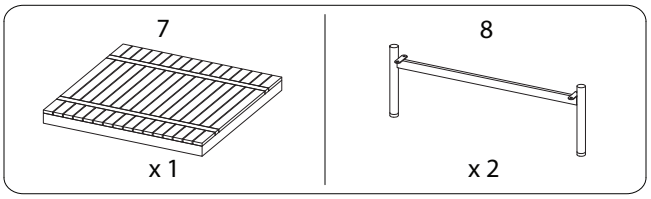

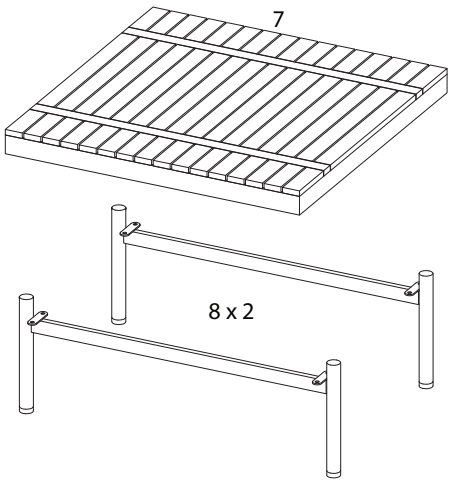

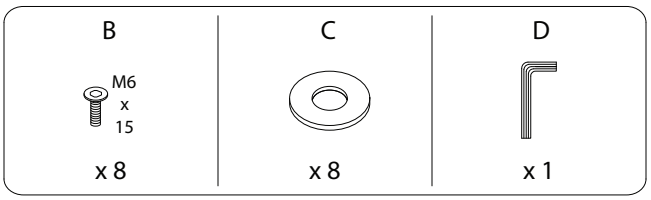

13/14

1085/BELLARIVA/280824/

1

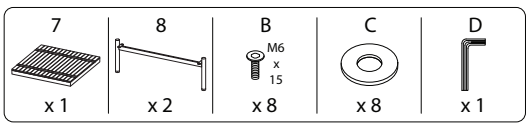

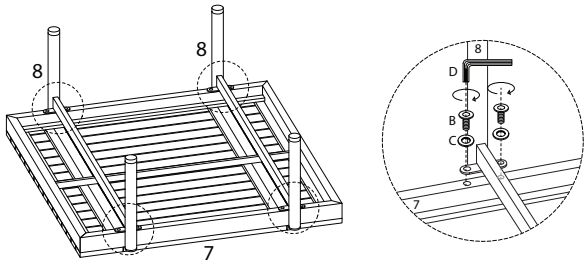

14/14

1085/BELLARIVA/280824/