BARATTI

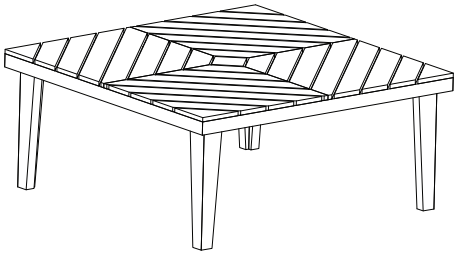

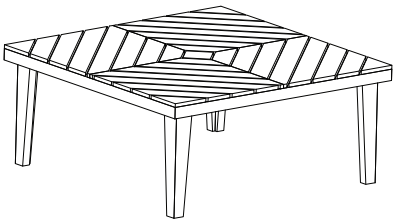

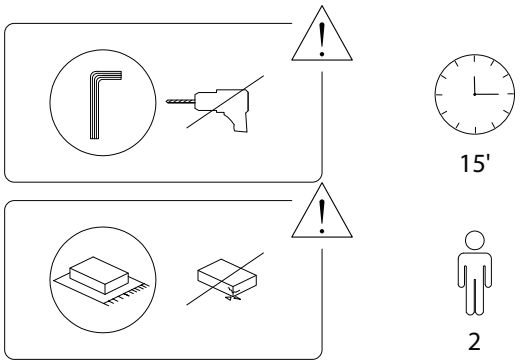

1/3

572/BARATTI/270323/

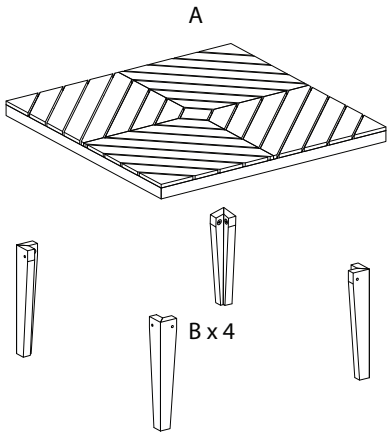

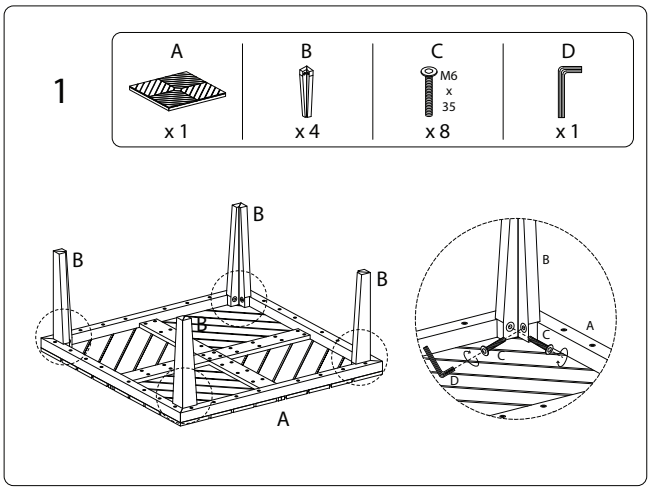

A	B	C	D
			
x 1	x 4	x 8	x 1

2/3

572/BARATTI/270323/

3/3

572/BARATTI/270323/