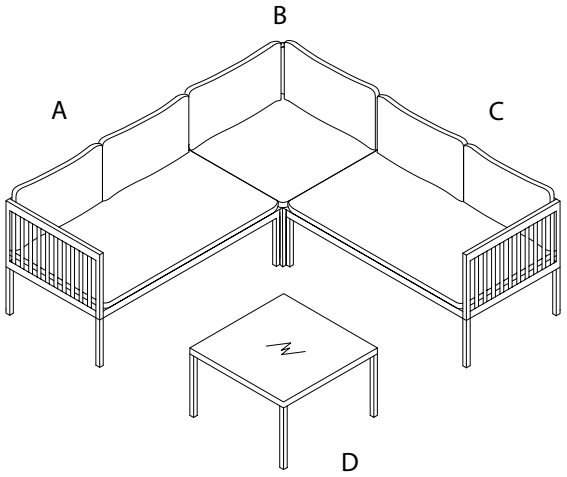

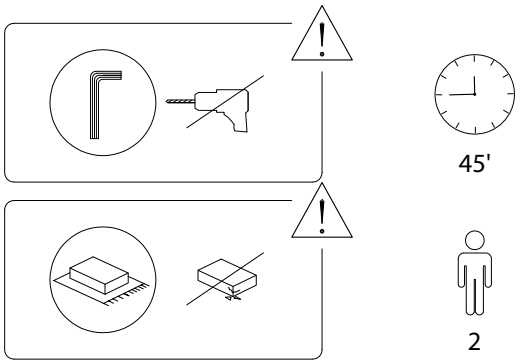

484/BORELLO.C/060521/

A

A	B	C	D
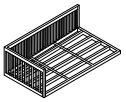		 M6 x 25	
x 1	x 2	x 4	x 8

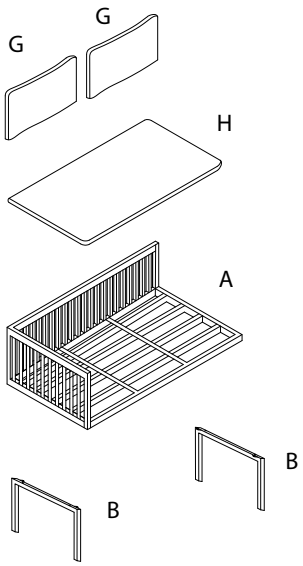

E	F	G	H
 M6 x 35			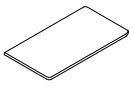
x 4	x 1	x 2	x 1

484/BORELLO.C/060521/

1

A	B	C	D	E	F
		 M6 x 25		 M6 x 35	
x 1	x 2	x 4	x 8	x 4	x 1

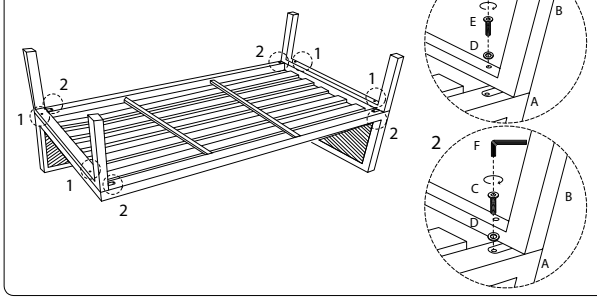

2

G	H
	
x 2	x 1

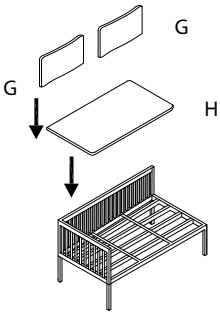

484/BORELLO.C/060521/

B

A	B	C	D
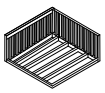		 M6 x 25	
x 1	x 2	x 4	x 8

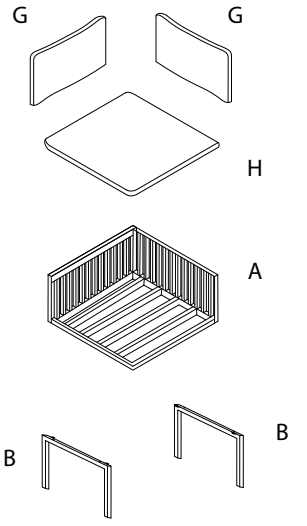

E	F	G	H
 M6 x 35			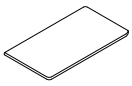
x 4	x 1	x 2	x 1

484/BORELLO.C/060521/

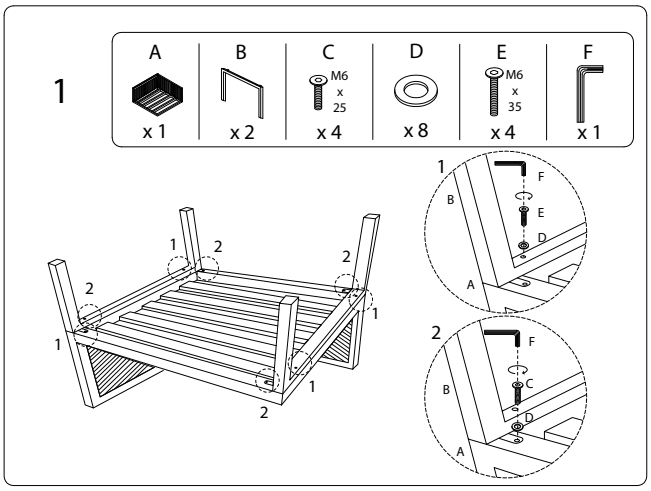
1
A
x 1
B
x 2
C
M6
x
25
x 4
D
x 8
E
M6
x
35
x 4
F
x 1

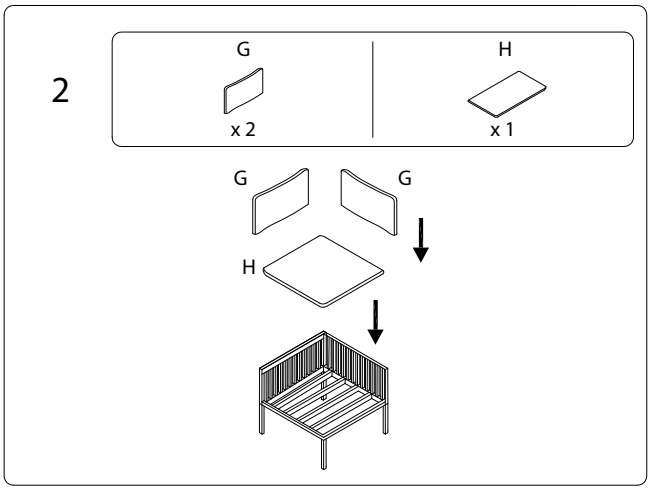
2
G
x 2
H
x 1

C

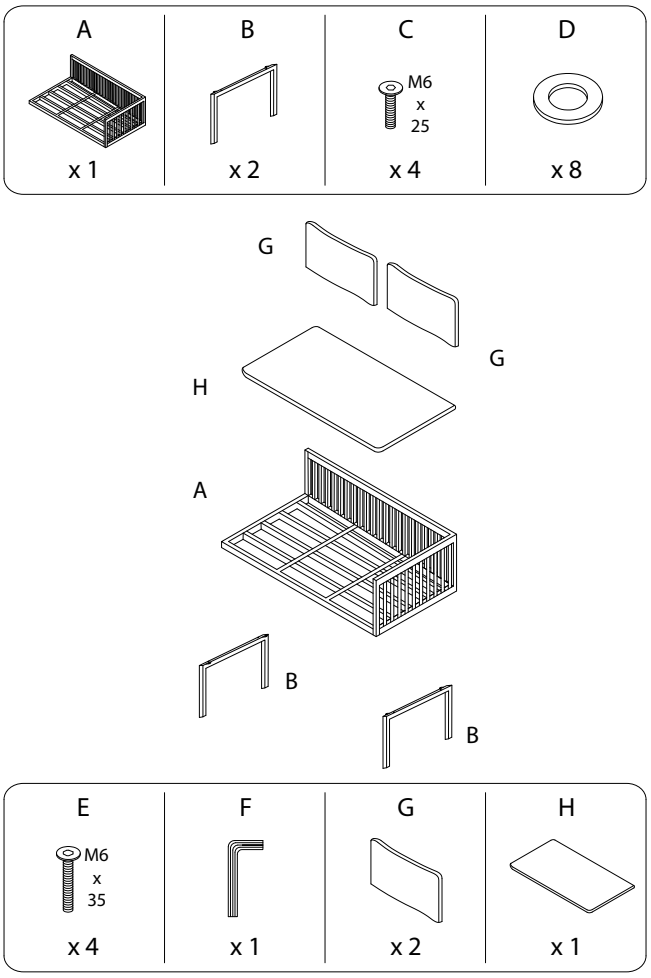
A
x 1
B
x 2
C
M6
x
25
x 4
D
x 8
E
M6
x
35
x 4
F
x 1
G
x 2
H
x 1

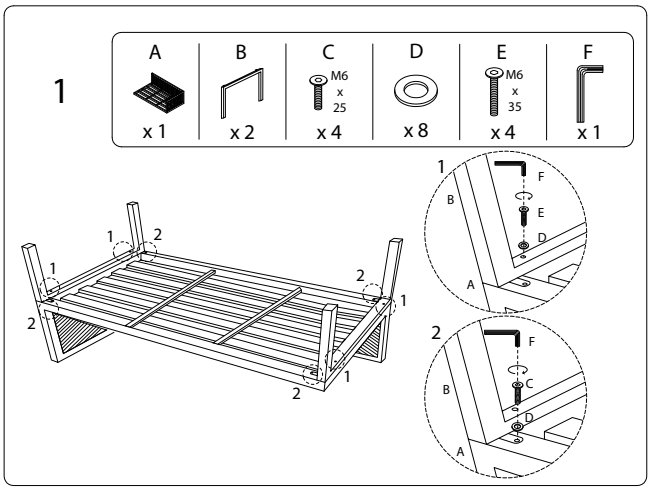
1
A
x 1
B
x 2
C
M6
x
25
x 4
D
x 8
E
M6
x
35
x 4
F
x 1

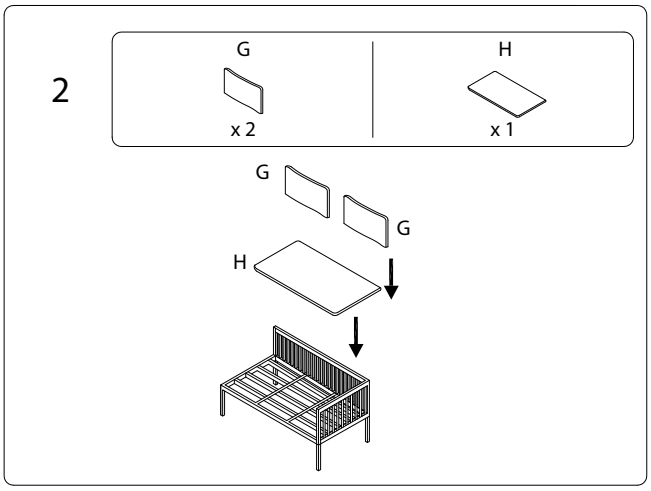
2
G
x 2
H
x 1

D

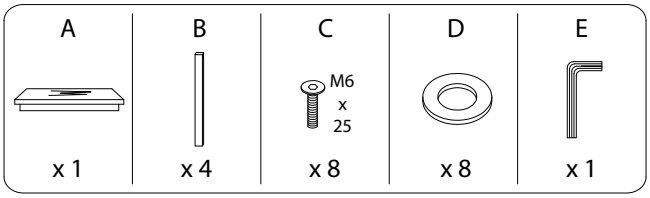
A
x 1
B
x 4
C
M6
x
25
x 8
D
x 8
E
x 1

A

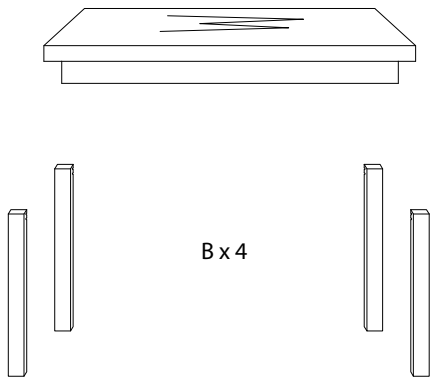
B x 4

1

A	B	C	D	E
				
x 1	x 4	x 8	x 8	x 1

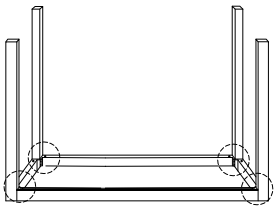

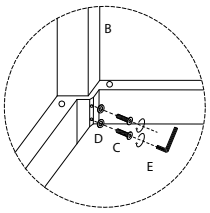

484/BORELLO.C/060521/