51095

PAGE 2/2

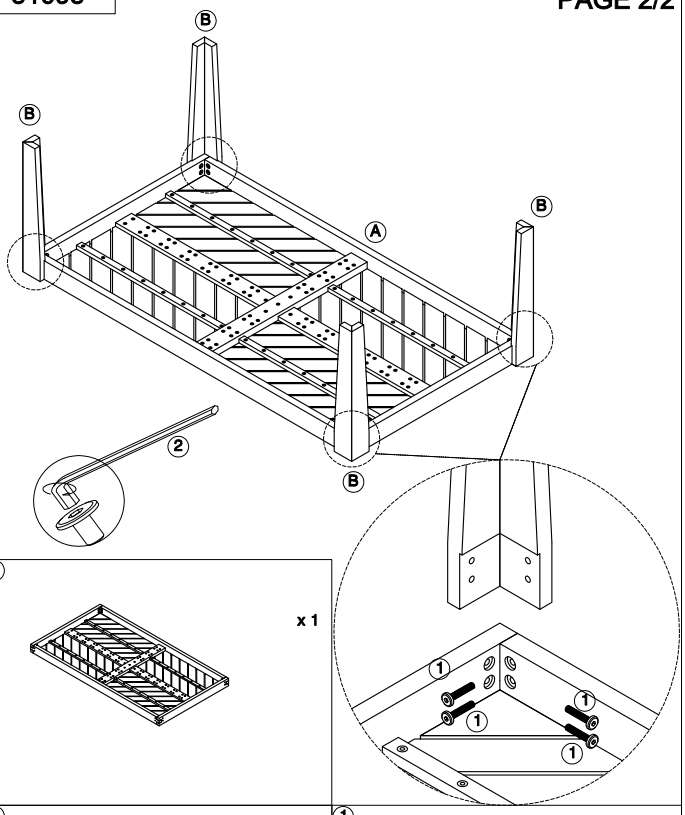

A

x 1

B



x 4

1

M6 x 30



x 16

2



x 1

51095

PAGE 1/2

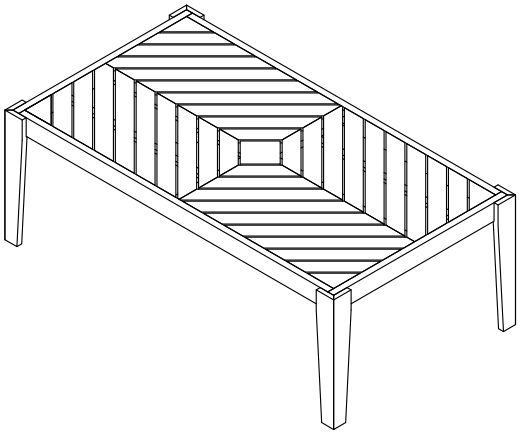

A

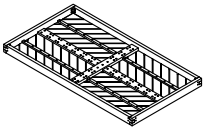

x 1

B



x 4

1

M6 x 30



x 16

2



x 1