NESSO

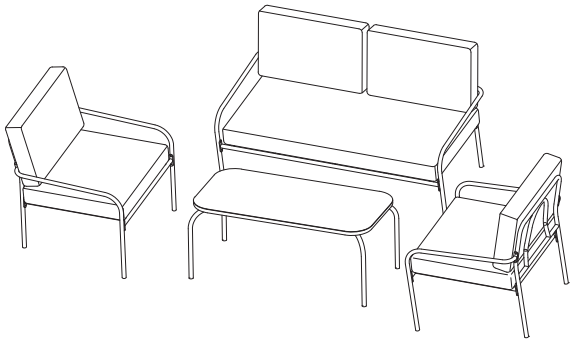

1/12

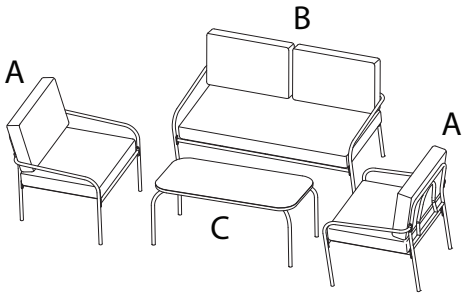

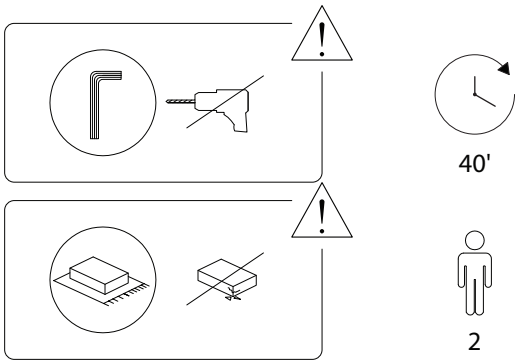

2/12

A x 2

A	B	C	D
x 1	x 1	x 1	x 1

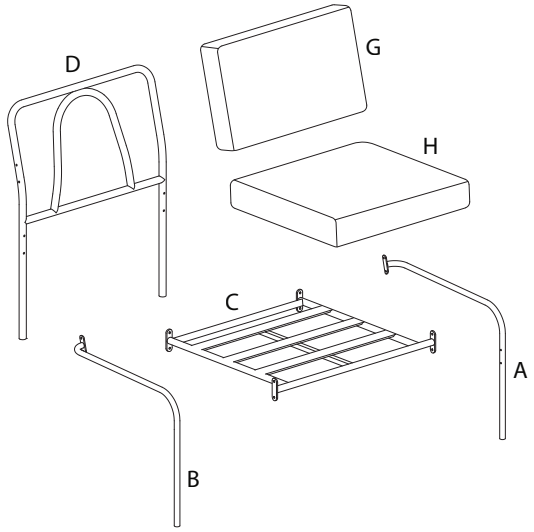

G	H	a	c	d	e
x 1	x 1	M6 x 15 x 12	x 12	x 12	x 1

3/12

1

C	D	a	c	e
x 1	x 1	M6 x 15 x 4	x 4	x 1

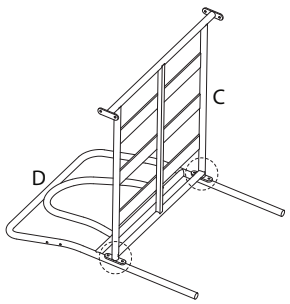

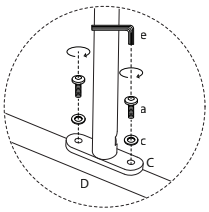

2

A	B	a	c	e
x 1	x 1	M6 x 15 x 8	x 8	x 1

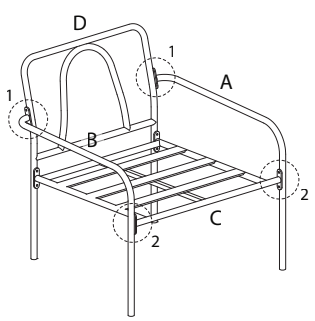

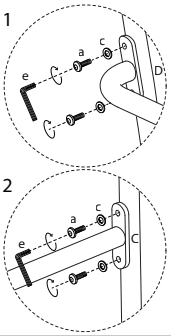

4/12

3

d

x 12

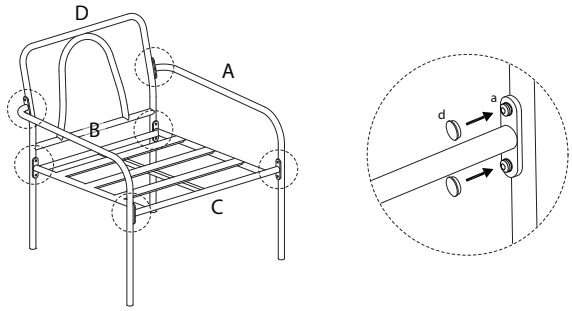

4

G	H
x 1	x 1

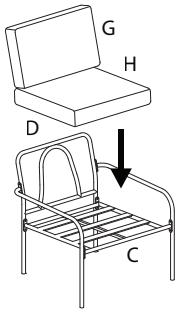

B

A	B	E	F	G	I
x 1	x 1	x 1	x 1	x 2	x 1

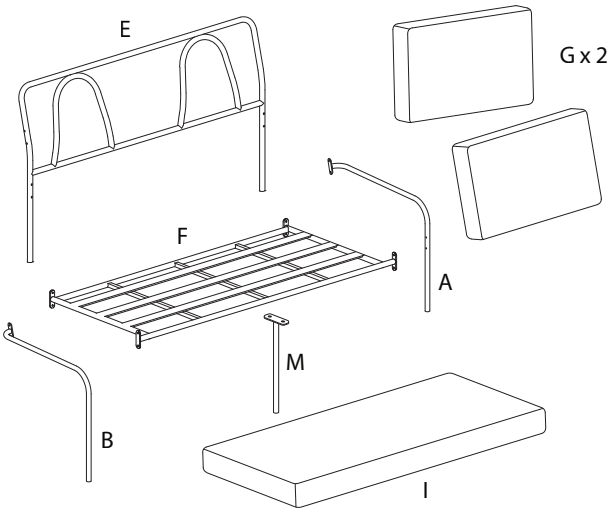

M	a	c	d	e
x 1	M6 x 15 x 14	x 14	x 14	x 1

1

E	F	a	c	e
x 1	x 1	M6 x 15 x 4	x 4	x 1

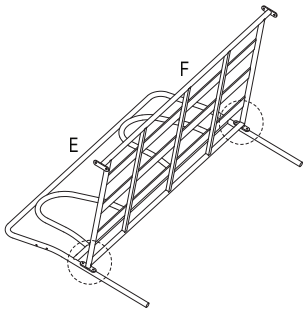

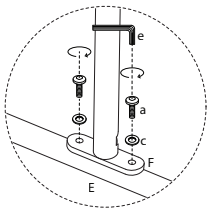

3

M	a	c	e
x 1	M6 x 15 x 2	x 2	x 1

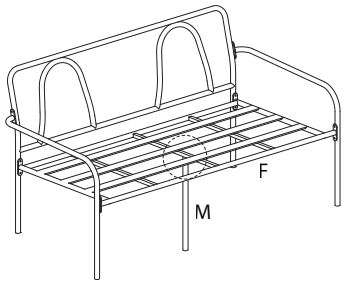

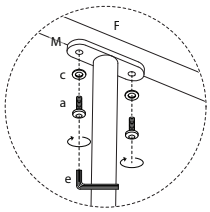

2

A	B	a	c	e
x 1	x 1	M6 x 15 x 8	x 8	x 1

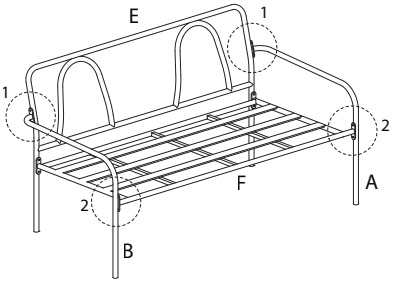

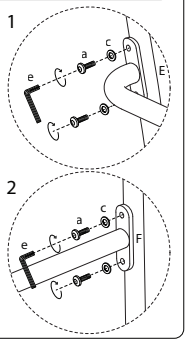

4

d

x 14

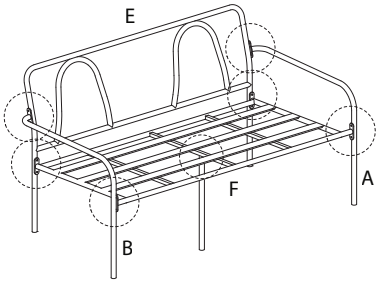

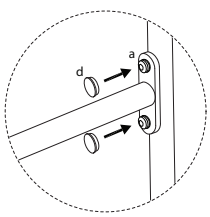

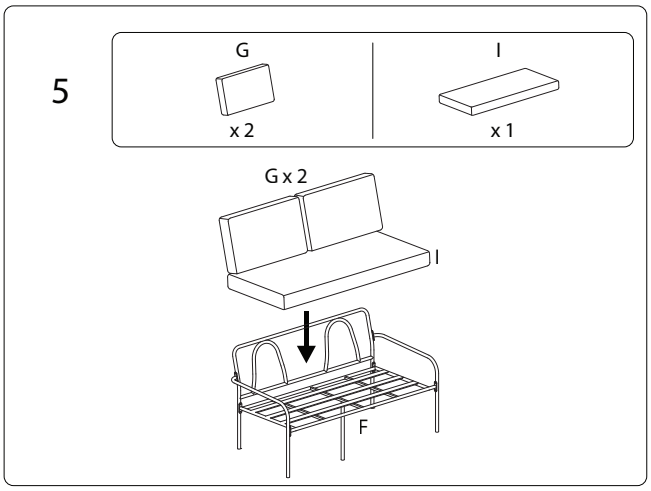
5
G
x 2
I
x 1
G x 2
I
F

C

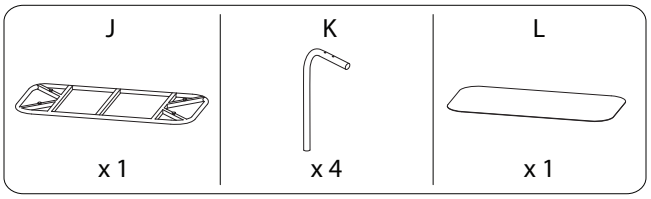
J
x 1
K
x 4
L
x 1

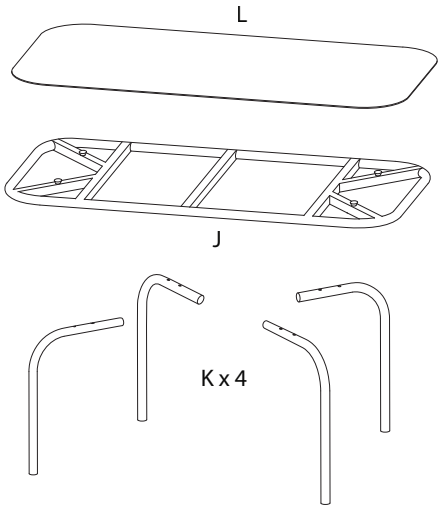
L
J
K x 4

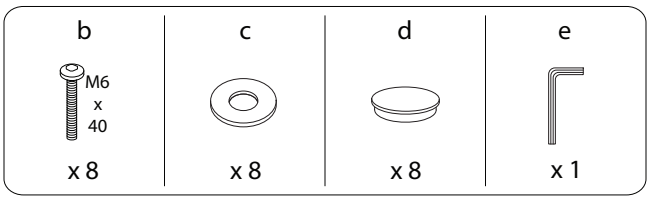
b
M6
x
40
x 8
c
x 8
d
x 8
e
x 1

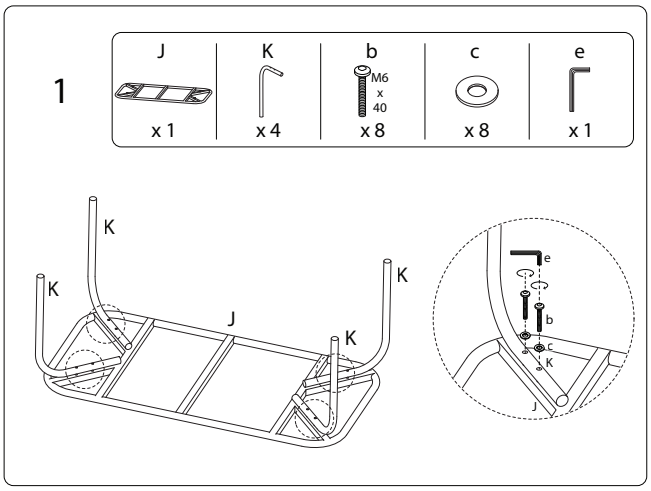
1
J
x 1
K
x 4
b
M6
x
40
x 8
c
x 8
e
x 1
K
K
J
K
K
e
b
c
K
J

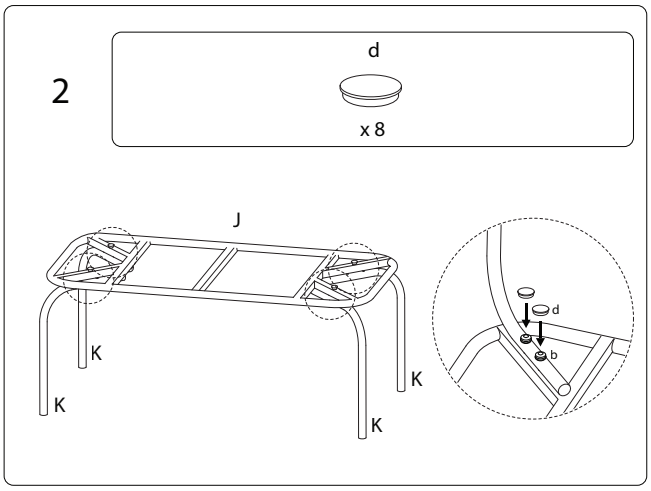
2
d
x 8
J
K
K
K
K
d
b

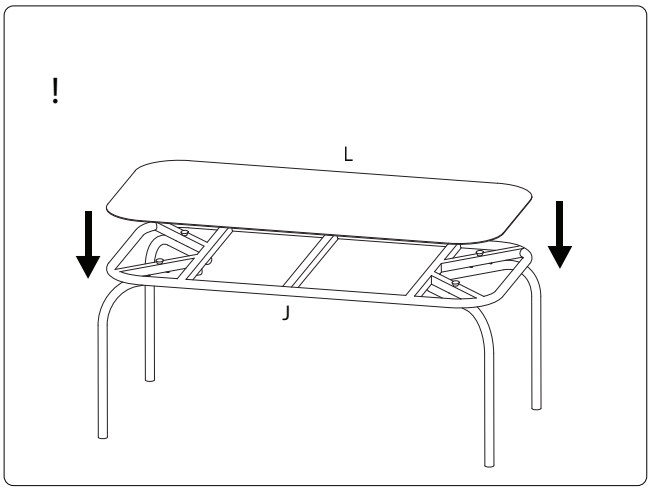
!
L
J