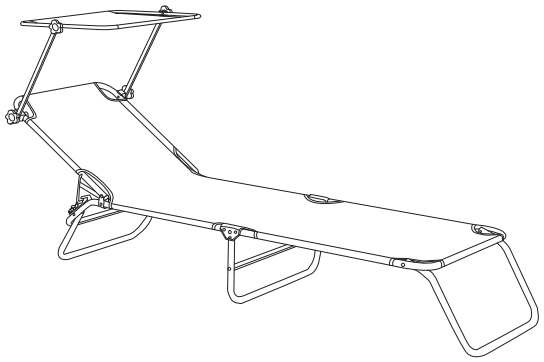

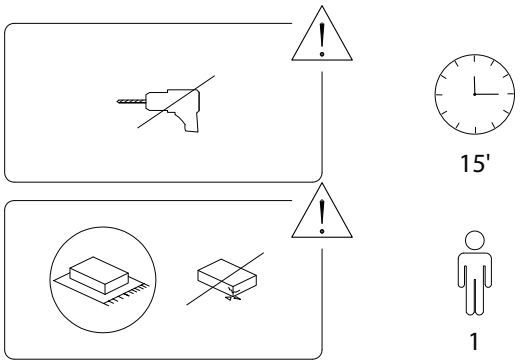

1/4

1622/FOLIGNO III/100821/

1	2	3
x 2	x 4	x 4

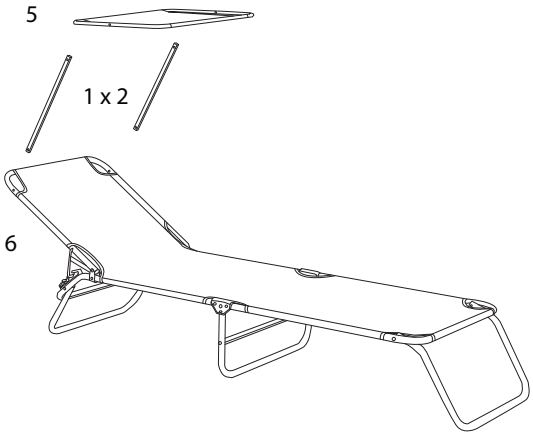

4	5	6
x 4	x 1	x 1

2/4

1622/FOLIGNO III/100821/

1

1	2	3	4	5
x 2	x 2	x 2	x 2	x 1

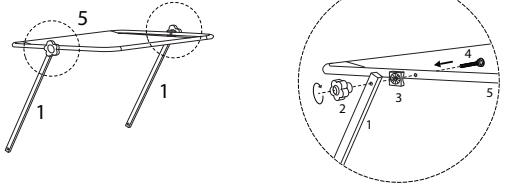

3

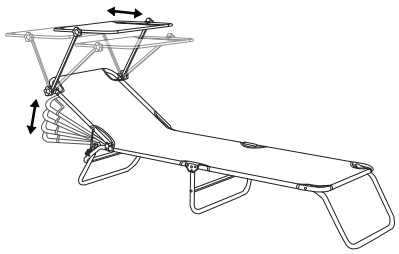

2

2	3	4	6
x 2	x 2	x 2	x 1

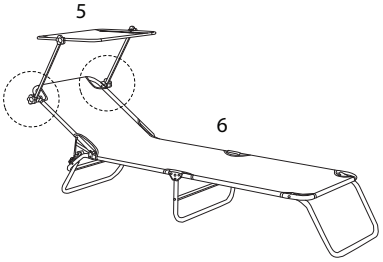

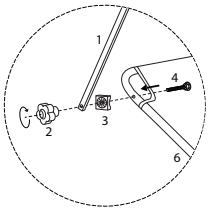

4

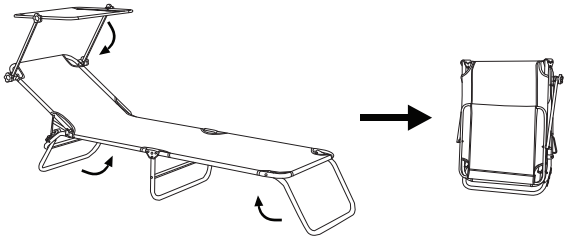

3/4

1622/FOLIGNO III/100821/

4/4

1622/FOLIGNO III/100821/