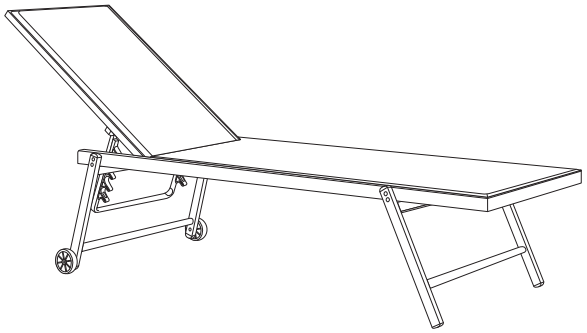

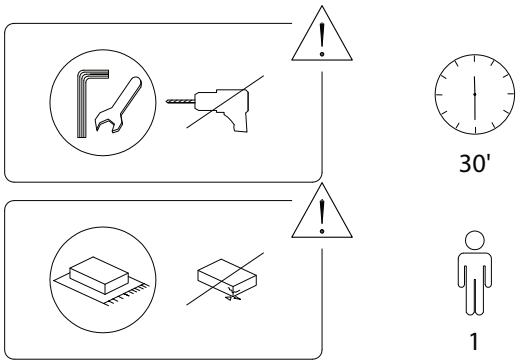

30'

1

1/6

1778/PORTOFINO/240621/

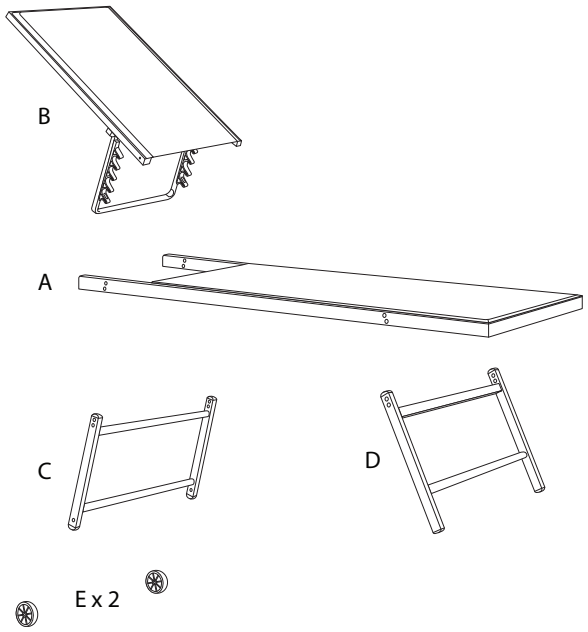

A	B	C	D
x 1	x 1	x 1	x 1

2/6

1778/PORTOFINO/240621/

E	F	G
x 2	M6 x 45 x 2	M8 x 40 x 8
H	**I**	**J**
M8 x 40 x 2	Ø16 x 8	Ø12 x 2
K	**L**	**M**
x 2	M6 x 1	M8 x 1
O	**P**	
M8 x 2	M8 x 1	

3/6

1778/PORTOFINO/240621/

1

A	D	G	I	M
x 1	x 1	M8 x 40 x 4	Ø16 x 4	M8 x 1

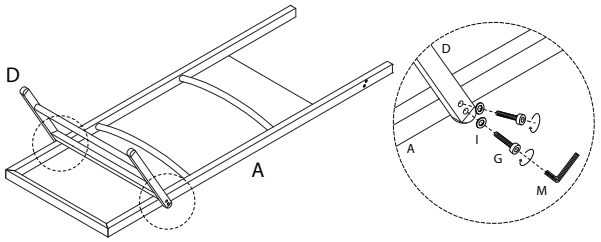

!

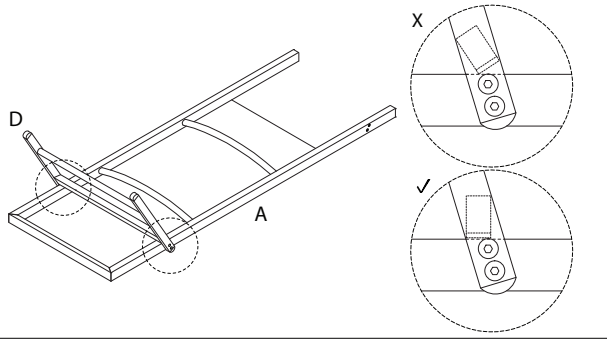

4/6

1778/PORTOFINO/240621/

2

C	G	I	M
	 M8 x 40	 Ø16	 M8
x 1	x 4	x 4	x 1

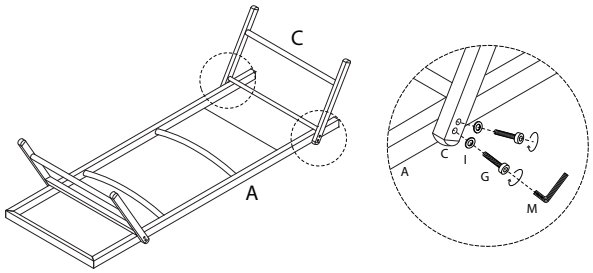

3

B	F	J	K	L
	 M6 x 45	 Ø12		 M6
x 1	x 2	x 2	x 2	x 1

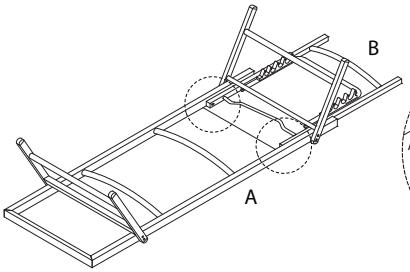

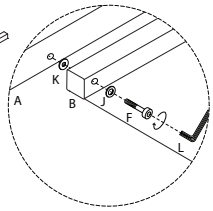

4

E	H	M	O	P
	 M8 x 40	 M8	 M8	 M8
x 2	x 2	x 1	x 2	x 1

