ALBA

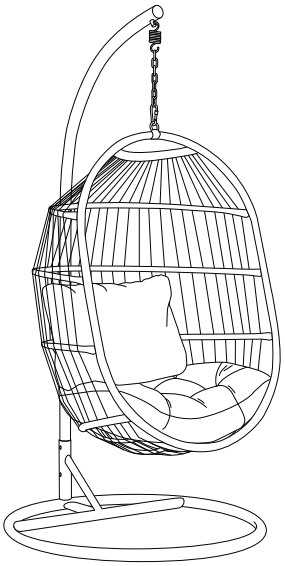

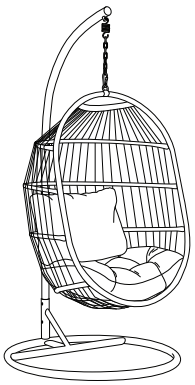

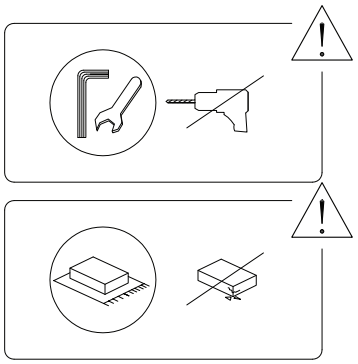

20'

1

1/5

A	B	C	D	E	F
			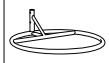	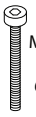	
x 1	x 1	x 1	x 1	x 3	x 3

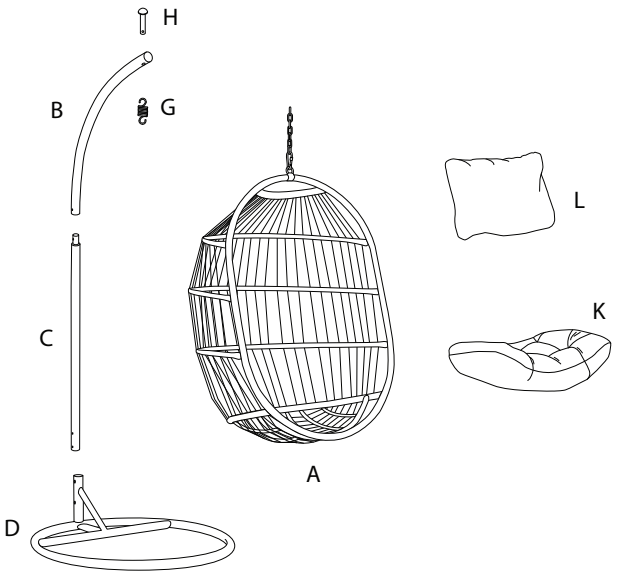

G	H	I	J	K	L
					
x 1	x 1	x 1	x 1	x 1	x 1

1

B	C	E	F	I	J
					
x 1	x 1	x 1	x 1	x 1	x 1

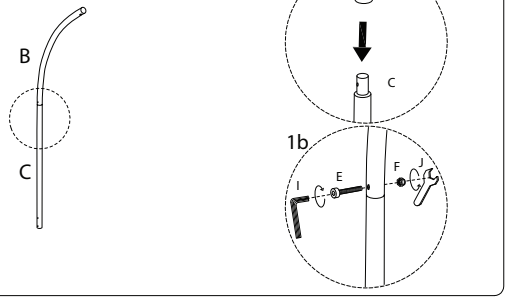

2

D	E	F	I	J
				
x 1	x 2	x 2	x 1	x 1

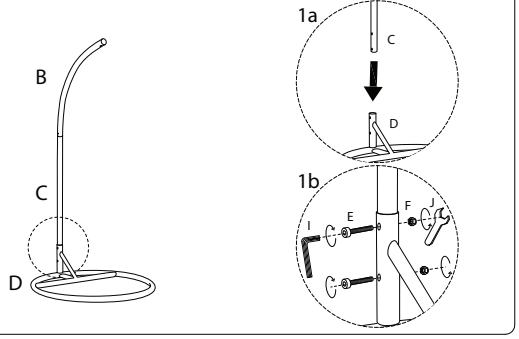

3

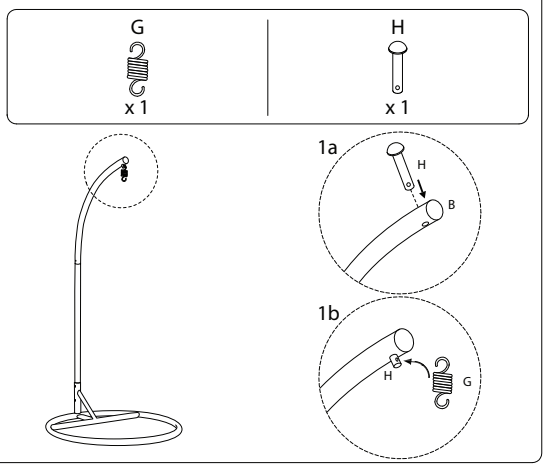

4

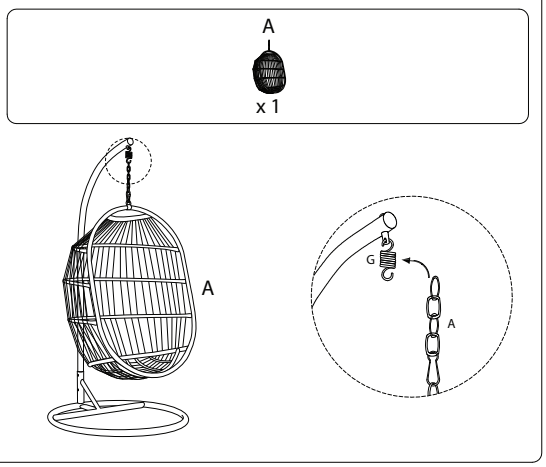

2323/ALBA/200924/

5

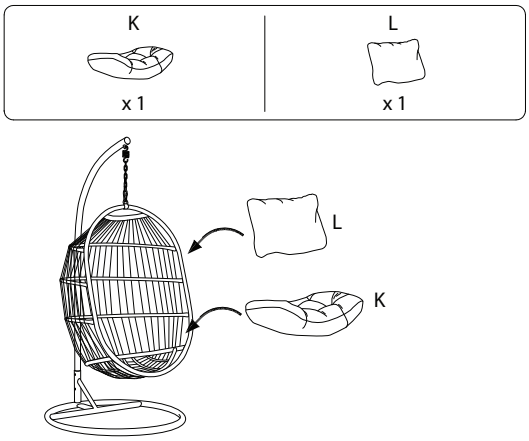

2323/ALBA/200924/