WALCOTT

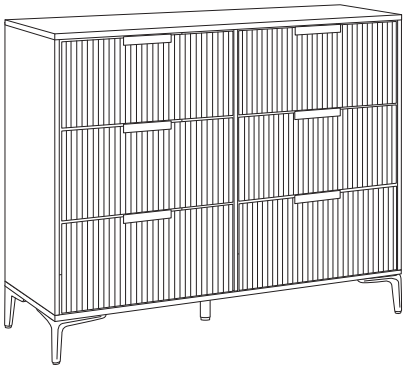

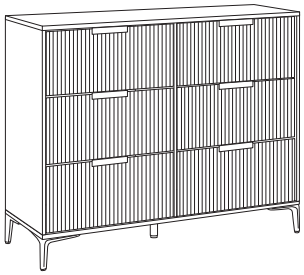

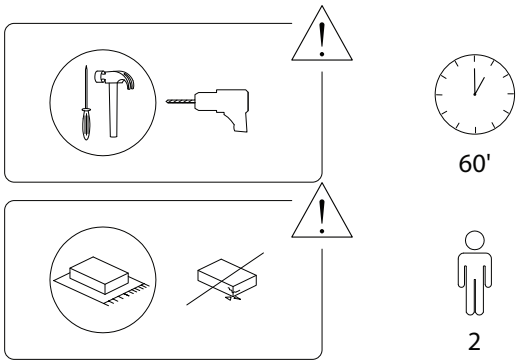

1/10

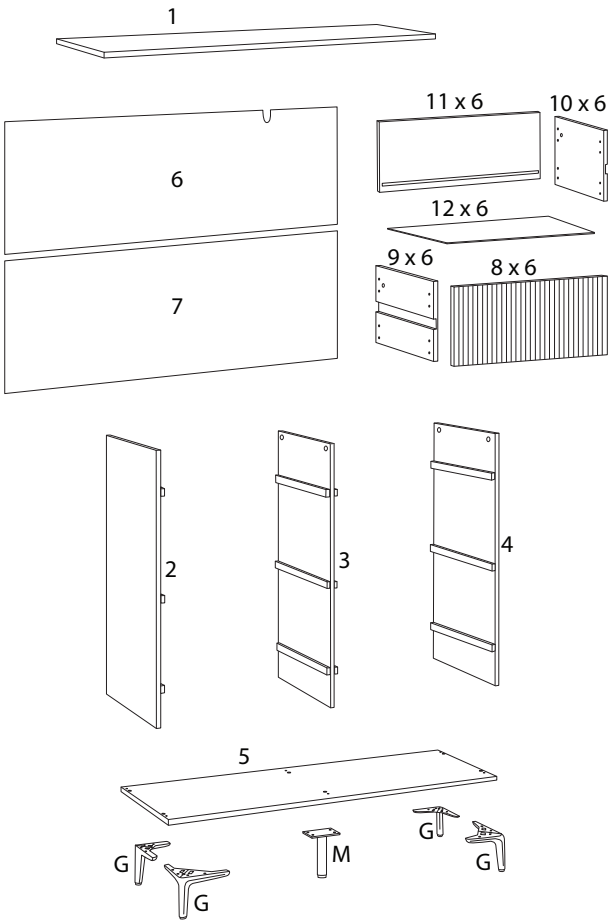

2/10

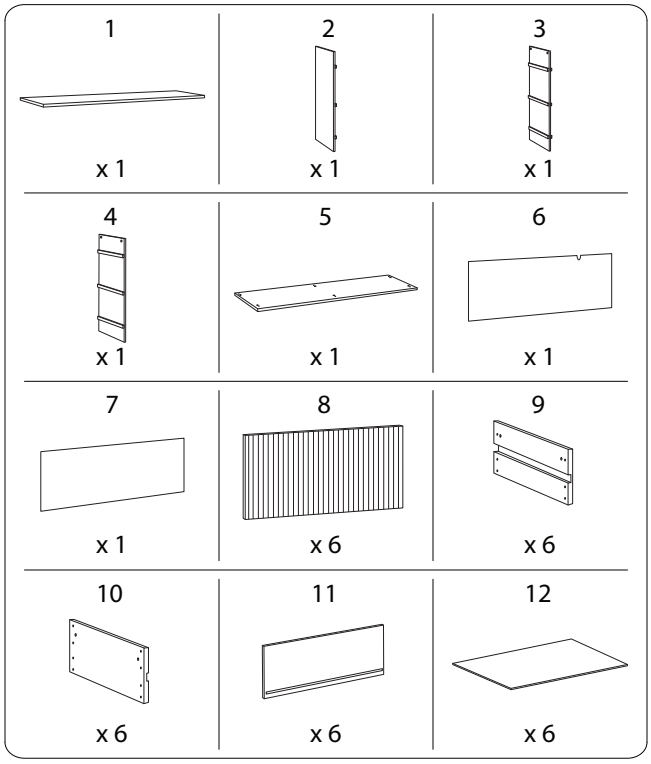

3/10

A	B	C
	 M4 x 15	 M3 x 30
x 18	x 20	x 96
D	**E**	**F**
		
x 30	x 12	x 12
G	**H**	**J**
		 M2.5 x 12
x 4	x 6	x 12
M	**O**	**P**
	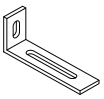	 M4 x 30
x 1	x 1	x 1
R	**S**	**T**
 M4 x 15		
x 1	**x 2**	**x 1**

1

2	3	4	A
x 1	x 1	x 1	x 12

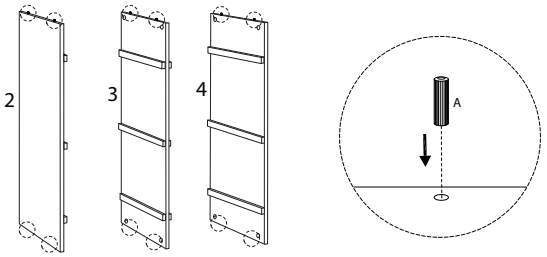

2

1	5	F
x 1	x 1	x 12

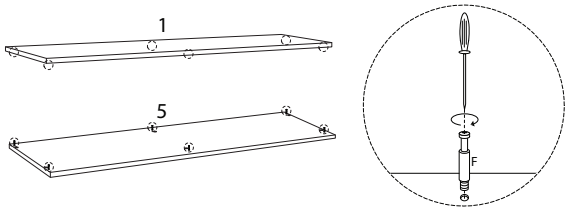

3

E
x 12

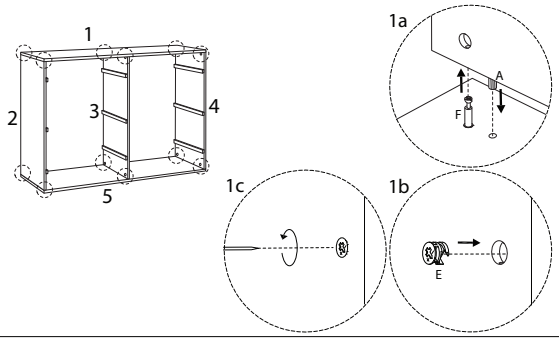

5

B	G	M
 M4 x 15		
x 20	x 4	x 1

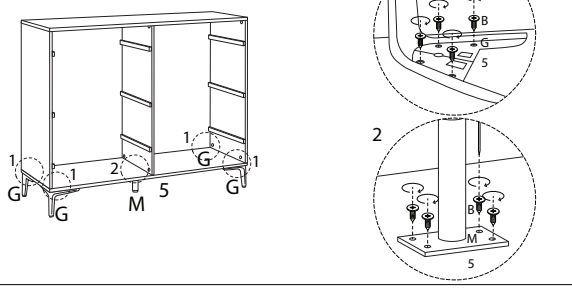

4

6	7	D
x 1	x 1	x 30

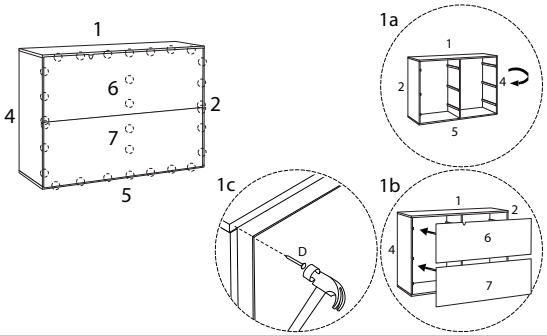

6 x 6

8	9	10	C
			 M3 x 30
x 1	x 1	x 1	x 8

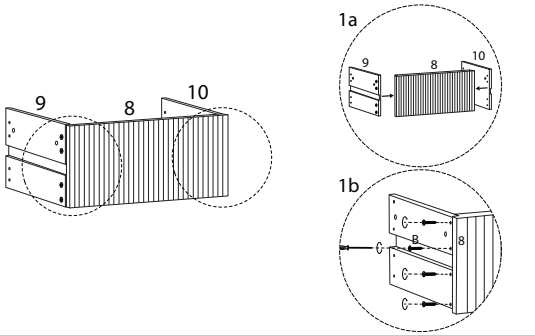

7 x 6

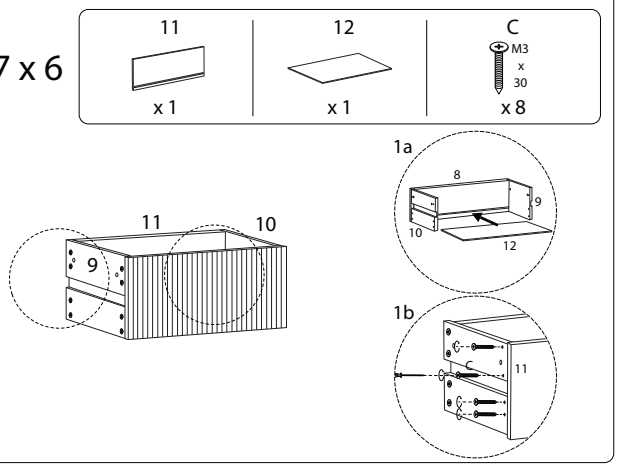

9 x 6

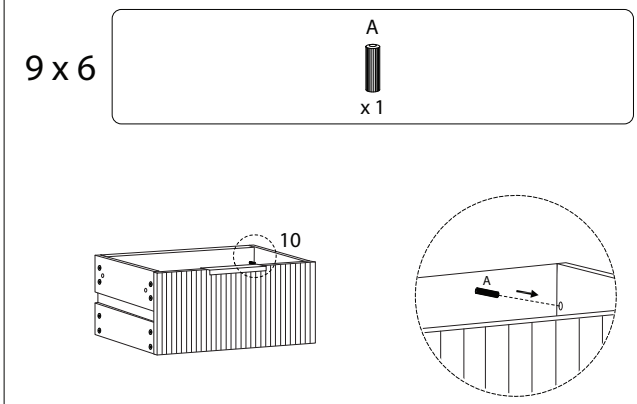

8 x 6

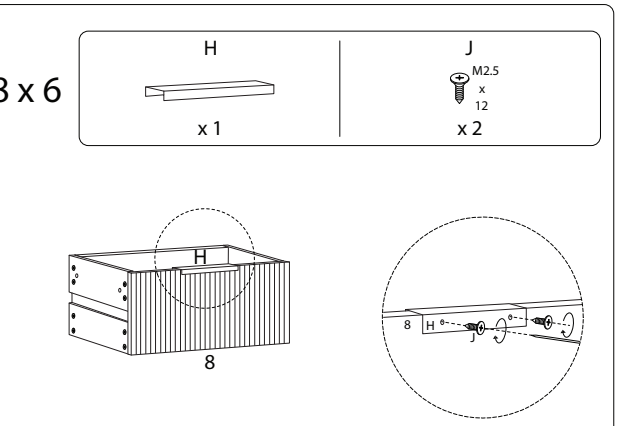

10

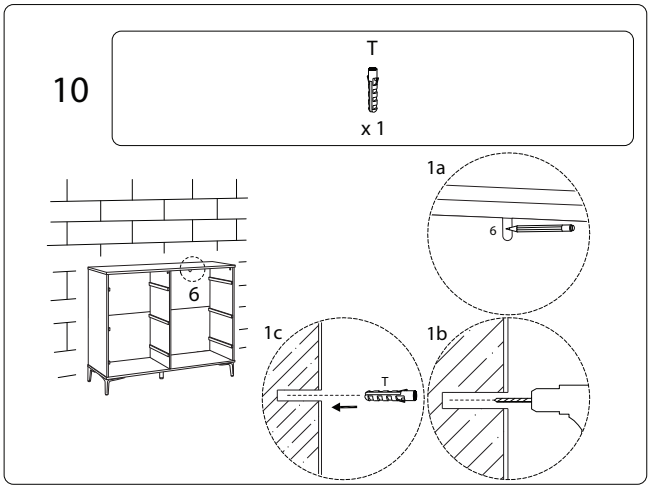

11

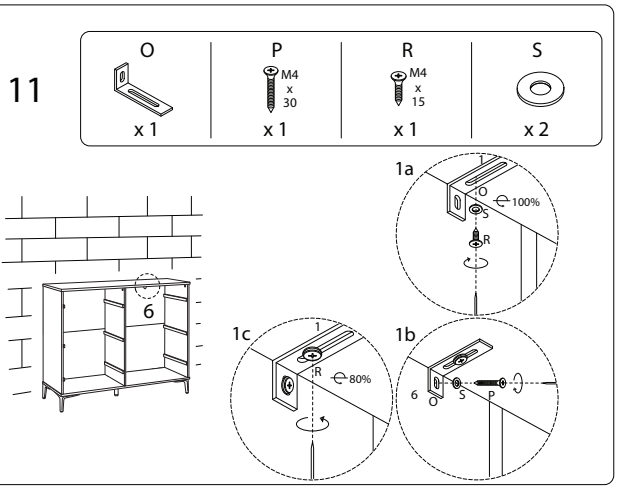

!

