NEWARK III



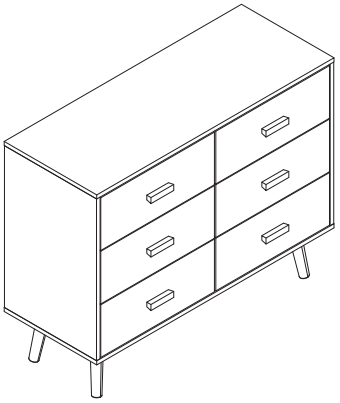

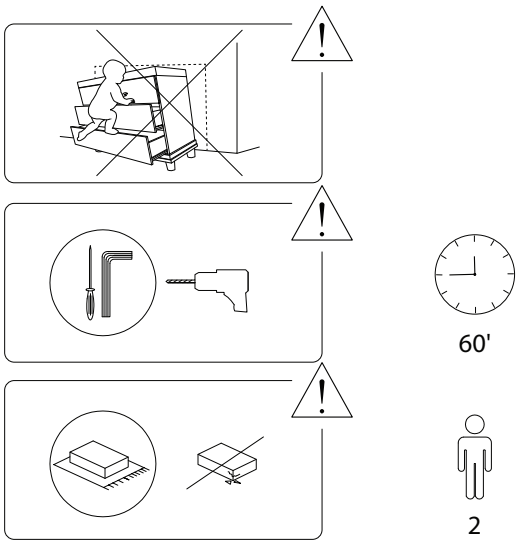
60'
2

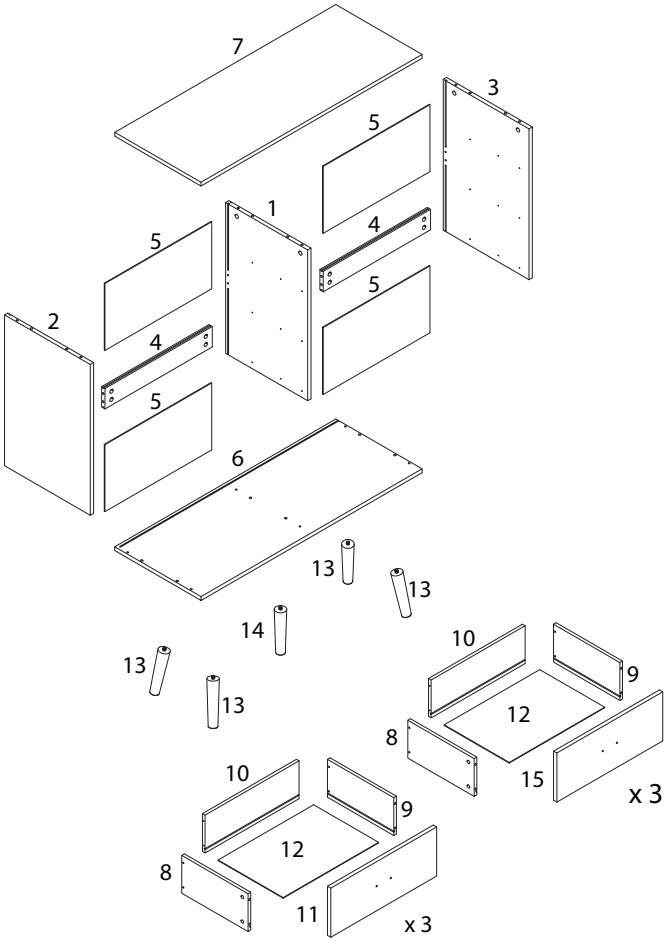
7
3
5
1
4
5
5
2
4
5
6
13
13
14
13
10
9
12
8
15
x 3
10
9
12
8
11
x 3

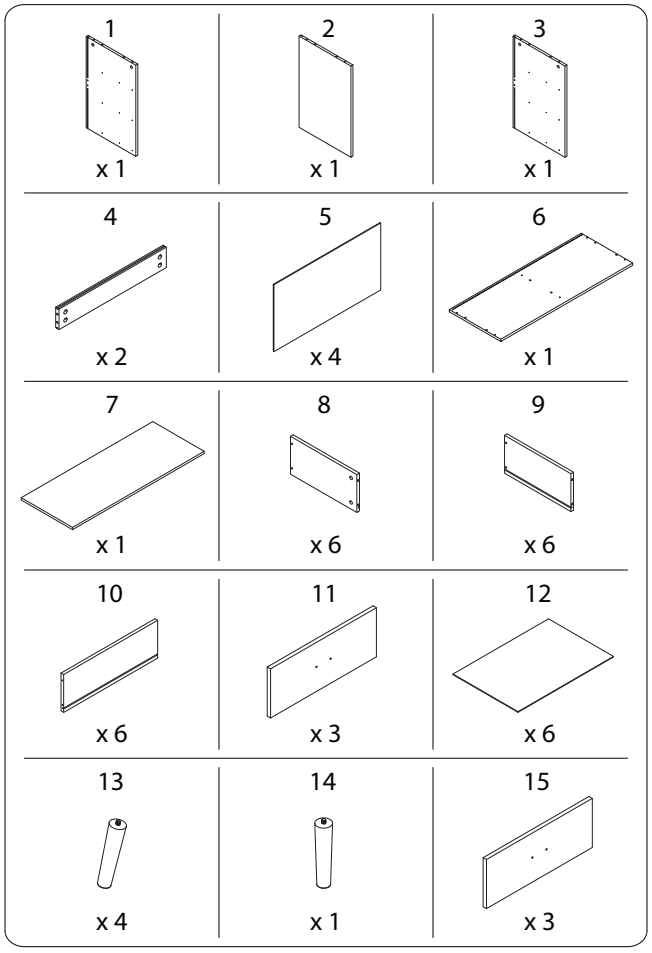
1
x 1
2
x 1
3
x 1
4
x 2
5
x 4
6
x 1
7
x 1
8
x 6
9
x 6
10
x 6
11
x 3
12
x 6
13
x 4
14
x 1
15
x 3

A	B	C	D
	 M3.5 x 12		
x 38	x 60	x 38	x 12
E	**F**	**G**	**H**
 M4 x 35		 M4 x 14	
x 30	x 4	x 22	x 6
I	**C_L**	**C_R**	**D_L**
 M4 x 25			
x 12	x 6	x 6	x 6
D_R	**J**	**K**	**L**
	 M4 x 40		
x 6	x 2	x 4	x 2
M	**N**	**O**	
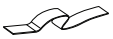		 M3 x 16	
x 2	x 8	x 8	

1

1	2	3	B	C_R	C_L
x 1	x 1	x 1	M3,5 x 12 x 36	x 6	x 6

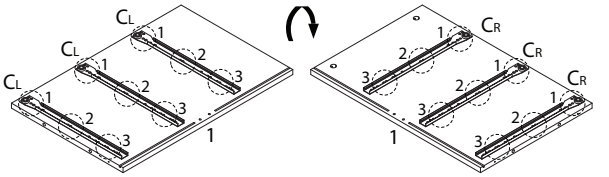

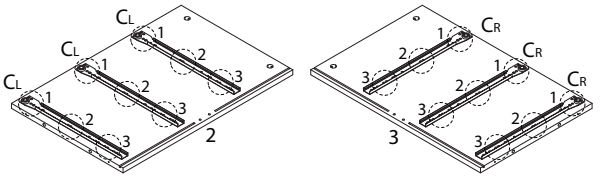

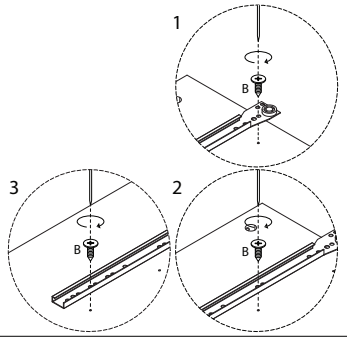

2

A
x 8

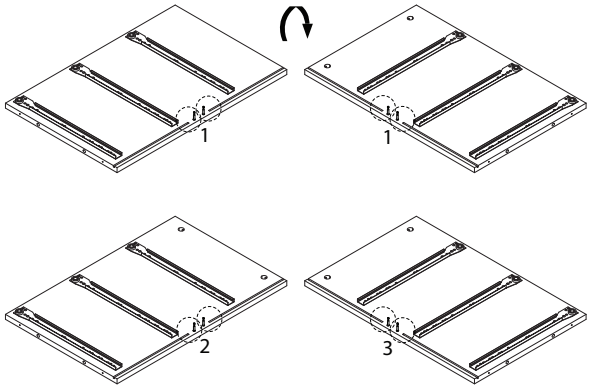

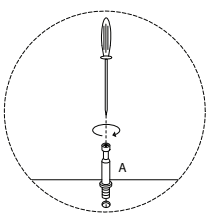

3

4	A
x 1	x 8

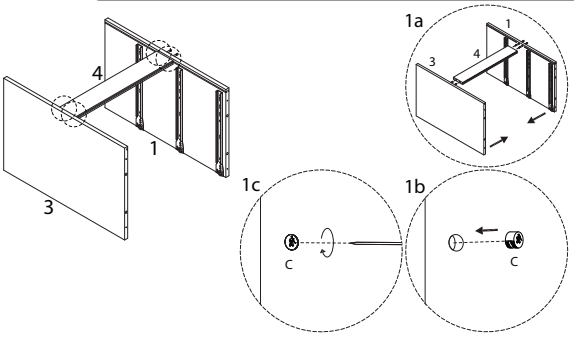

4

4	A
x 1	x 8

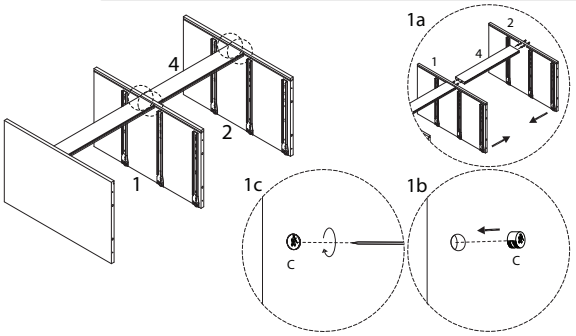

5

D

x 6

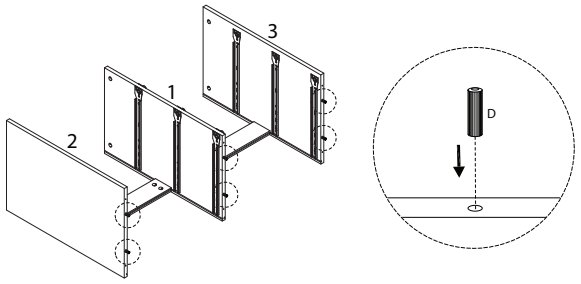

6

5

x 2

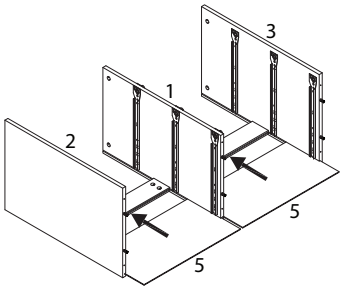

8/17

7

6

x 1

E

M4 x 35

x 6

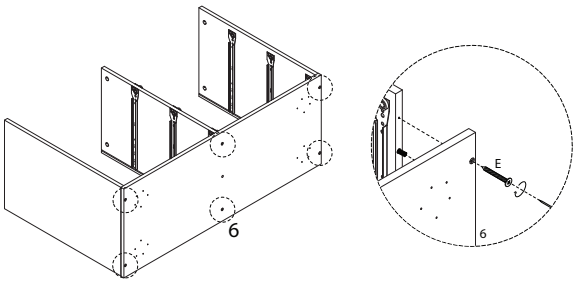

8

F

x 4

G

M4 x 14

x 20

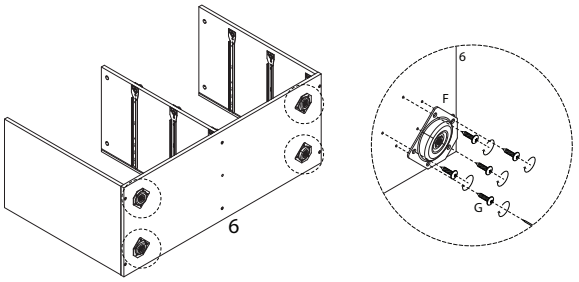

9/17

9

13

x 4

14

x 1

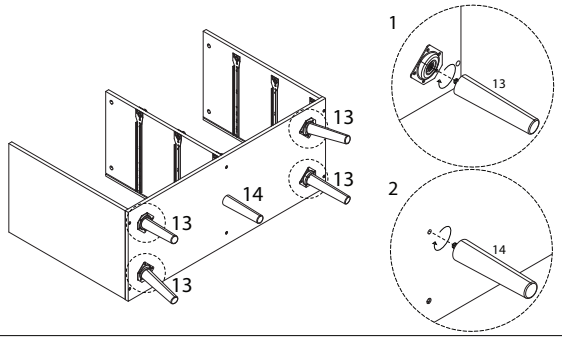

10

7

x 1

A

x 6

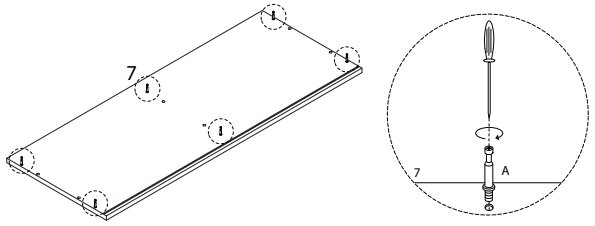

10/17

11

D

x 6

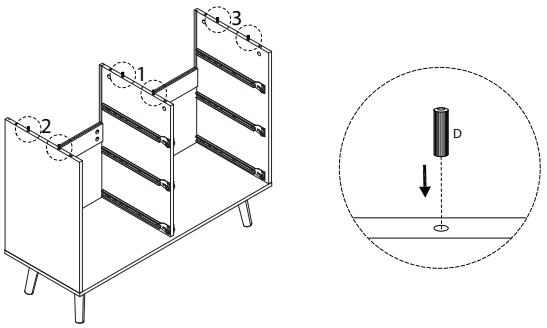

12

5

x 2

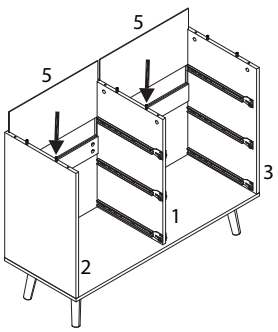

11/17

13

C
x 6

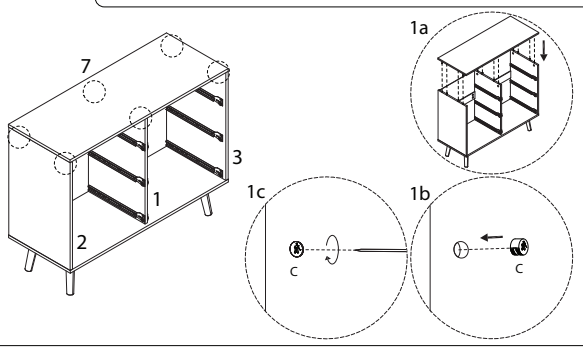

15 x 6

12
x 1

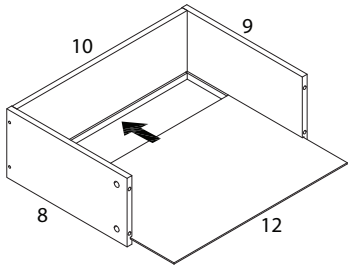

14 x 6

8
x 1

9
x 1

10
x 1

E
M4 x 35
x 4

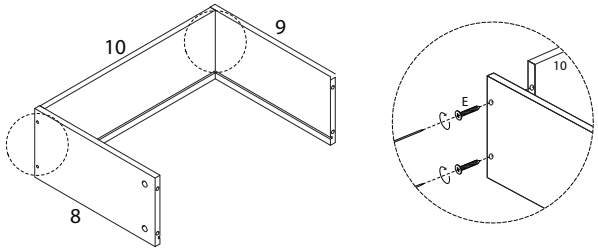

16 x 3

11
x 1

15
x 9

A
x 6

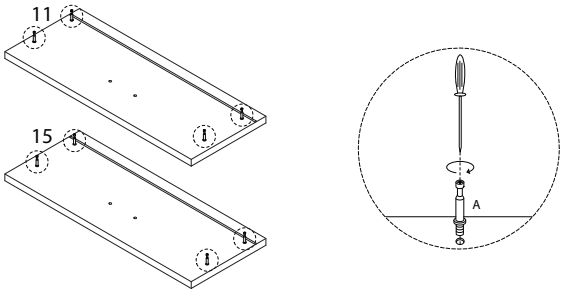

17 x 3

H
x 2

I
M4 x 25
x 4

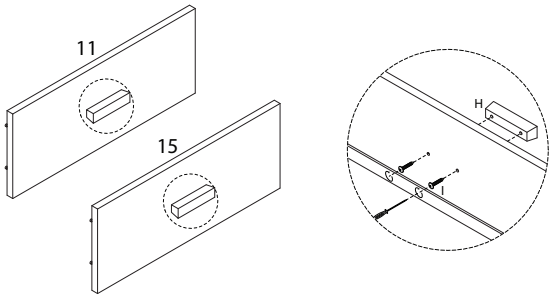

19 x 3

D_L
x 2

D_R
x 2

B
M3.5 x 12
x 8

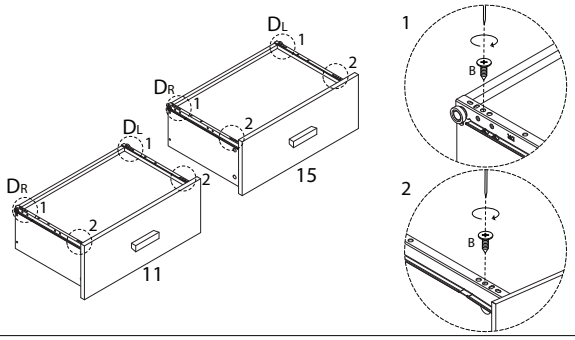

18 x 3

C
x 8

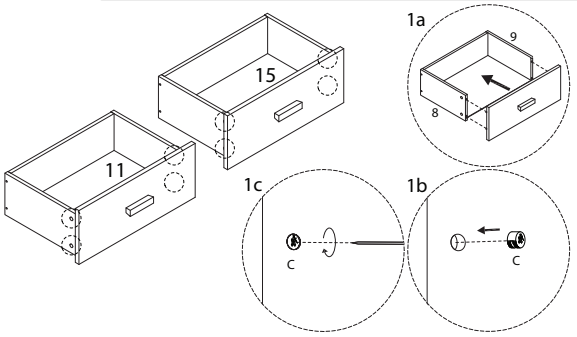

20

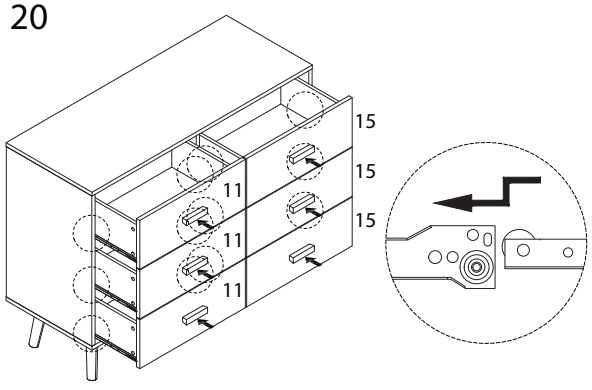

21

N	O
x 8	M3 x 16 x 8

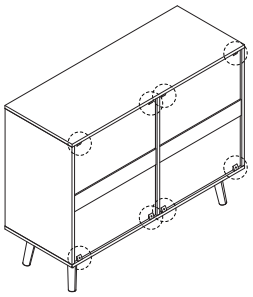

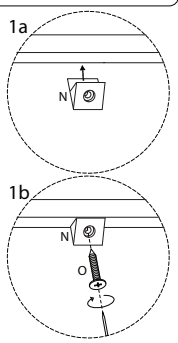

22

G	K	M
M4 x 14 x 2	x 2	x 2

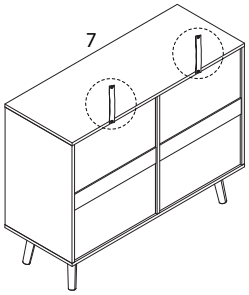

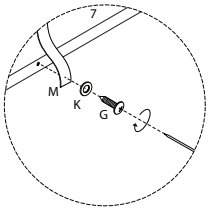

23

J	K	L
M4 x 40 x 2	x 2	x 2

