PEROTE

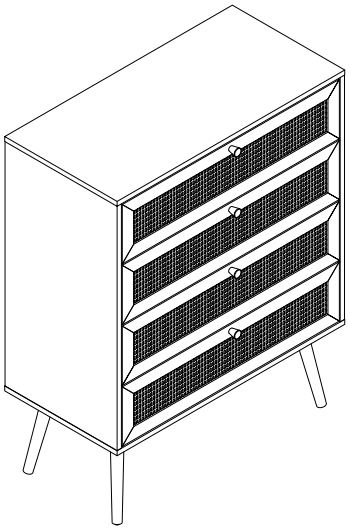

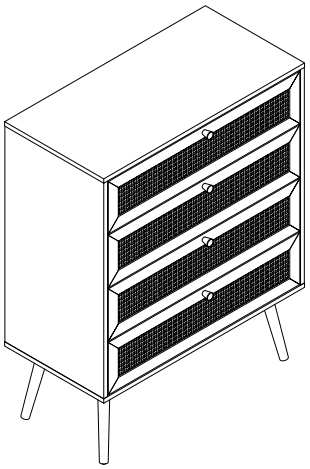

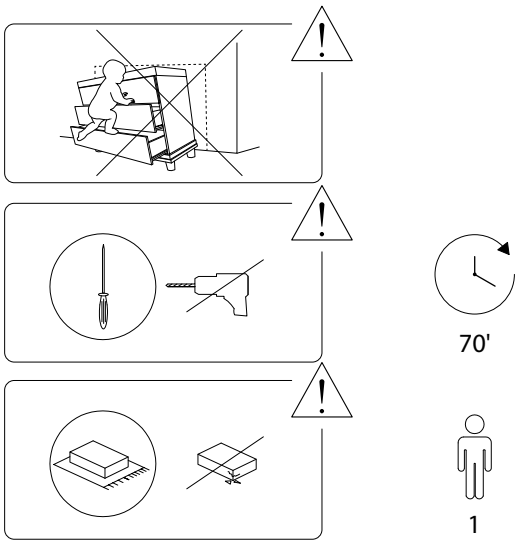

1966/PEROTE/210225/

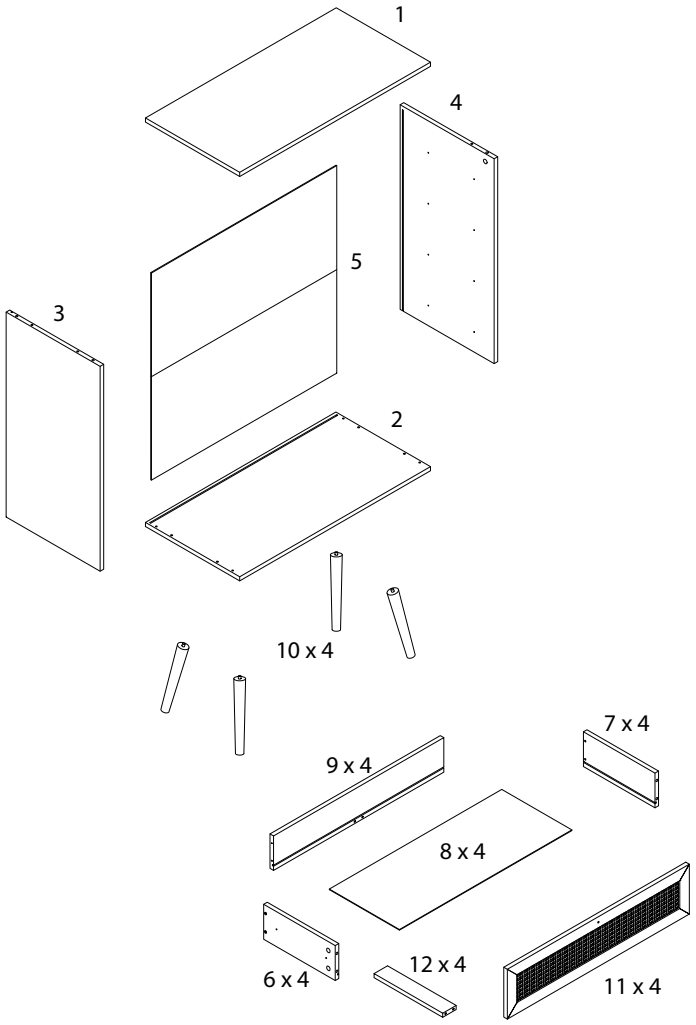

1966/PEROTE/210225/

1 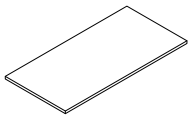 x 1	2 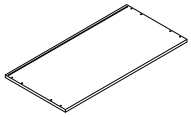 x 1	3 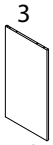 x 1
4  x 1	5 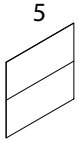 x 1	6  x 4
7  x 4	8 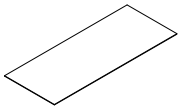 x 4	9 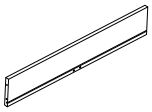 x 4
10  x 4	11 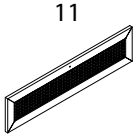 x 4	12  x 4

1966/PEROTE/210225/

A	B	C
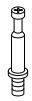		
x 20	x 20	x 24
D	**E**	**F**
 M4 x 40	 M 3.5 x 14	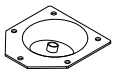
x 22	x 20	x 4
G	**H**	**I**
 M4 x 18	 M3.5 x 14	
x 4	x 46	x 4
J	**K**	**L**
	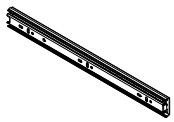	
x 12	x 8	x 4

M	N
	
x 2	x 2

!

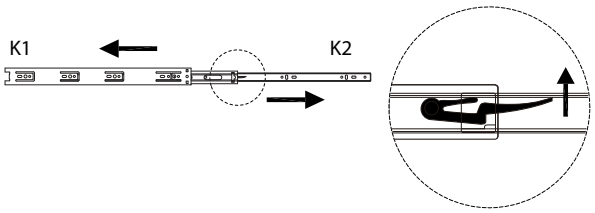

1

3	4	H	K1
x 1	x 1	M3.5 x 14 x 16	x 8

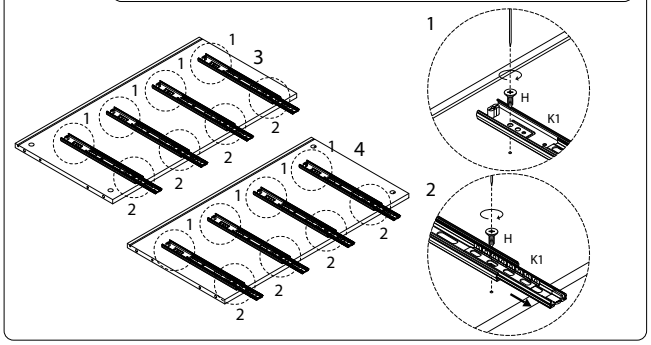

2 x 4

11	C
x 1	x 2

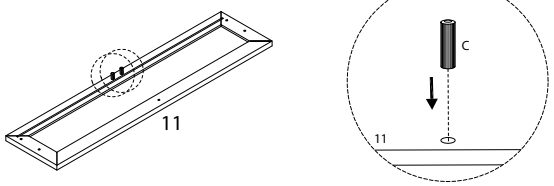

4 x 4

A
x 4

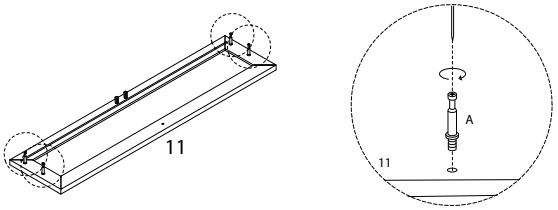

3

1	C
x 1	x 4

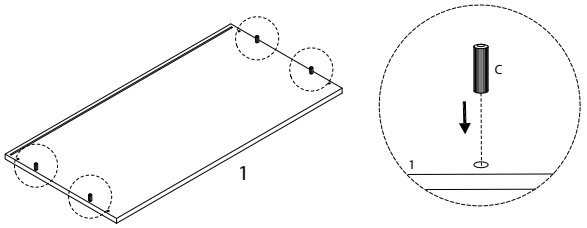

5

A
x 4

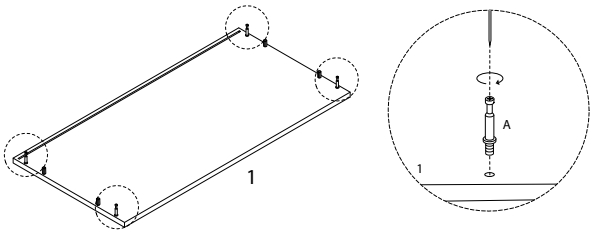

6

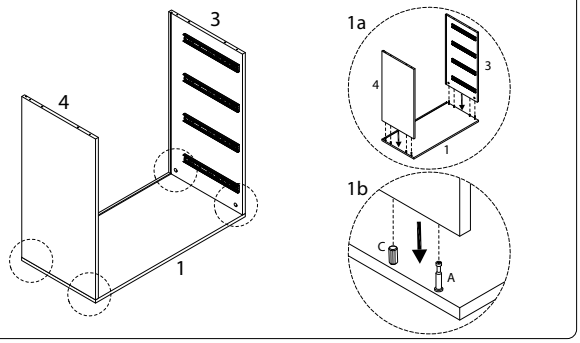

7

B

x 4

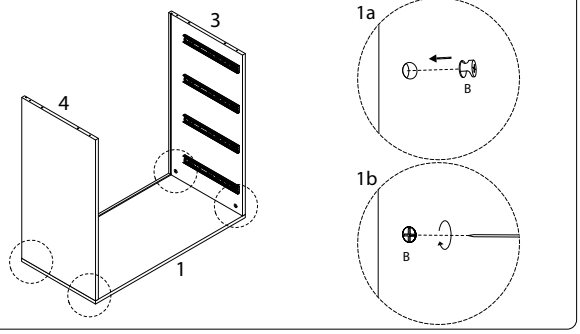

8

5

x 1

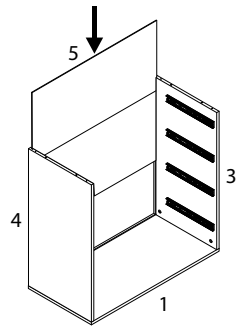

9

C

x 4

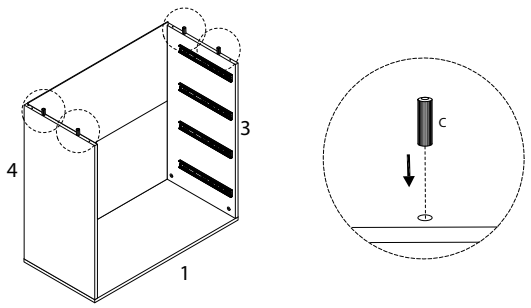

10

2

x 1

D

M4 x 40

x 4

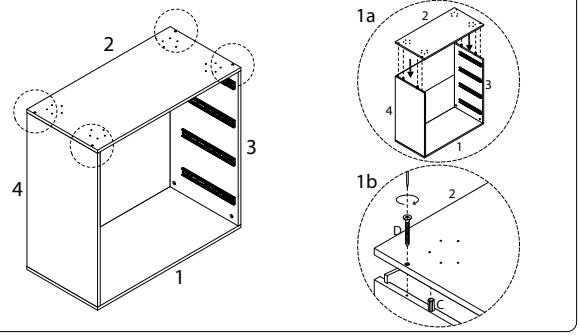

11

E

M 3.5 x 14

x 20

F

x 4

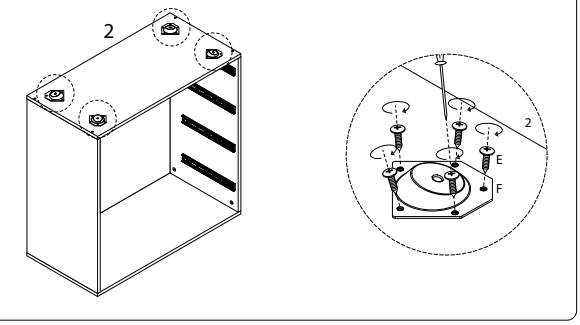

12

10

x 4

L

x 4

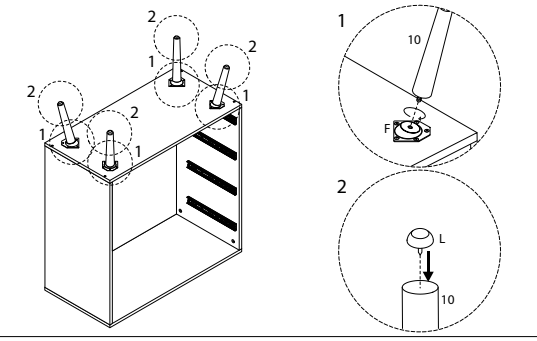

13 x 4

6

x 1

7

x 1

H

M3.5 x 14

x 4

K2

x 2

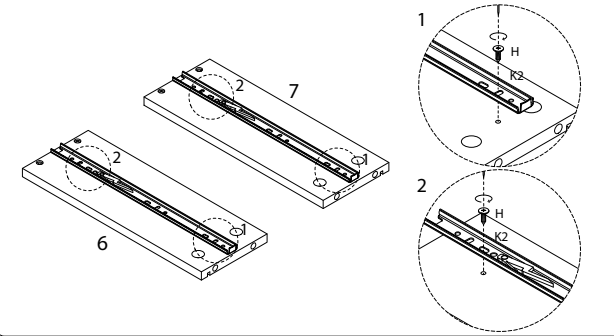

14 x 4

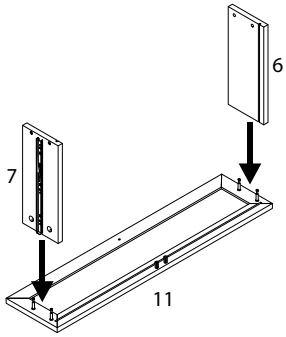

15 x 4

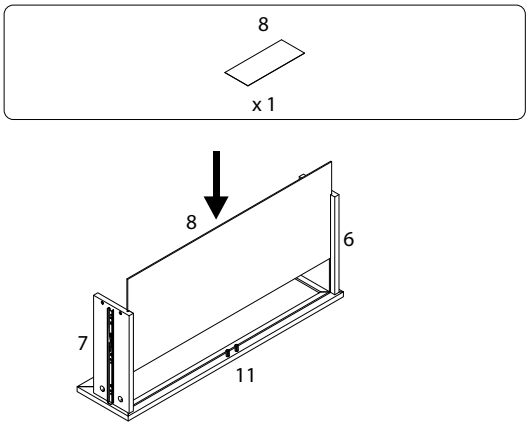

12/17

16 x 4

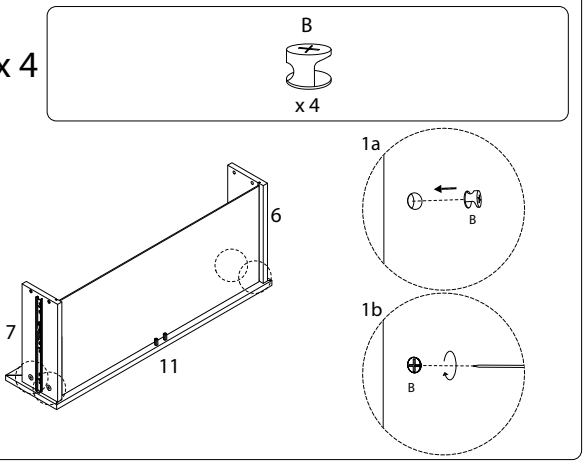

17 x 4

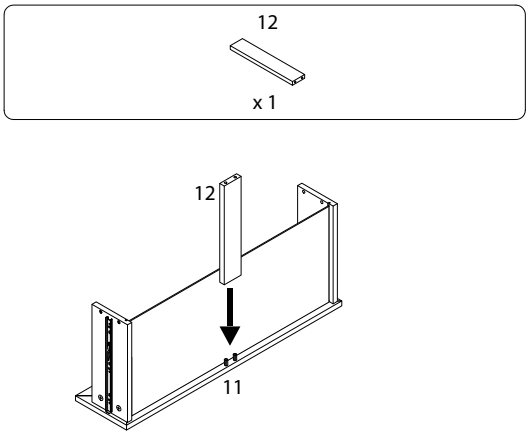

13/17

18 x 4

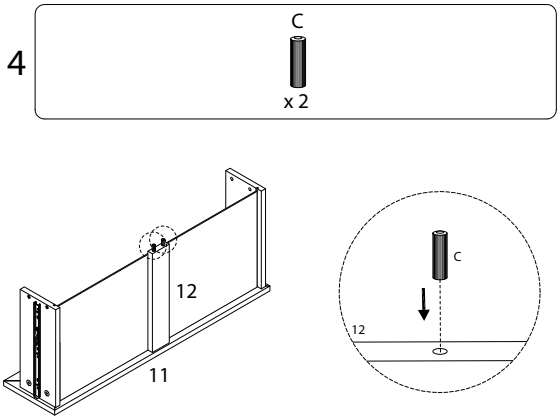

20 x 4

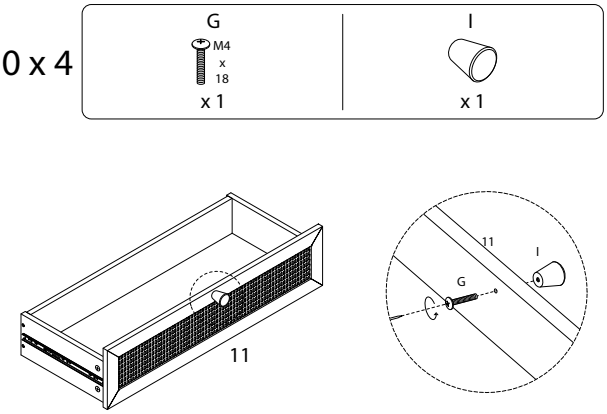

19 x 4

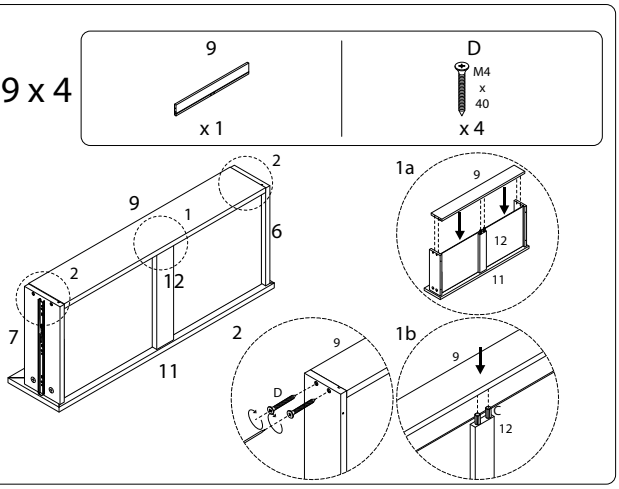

14/17

21

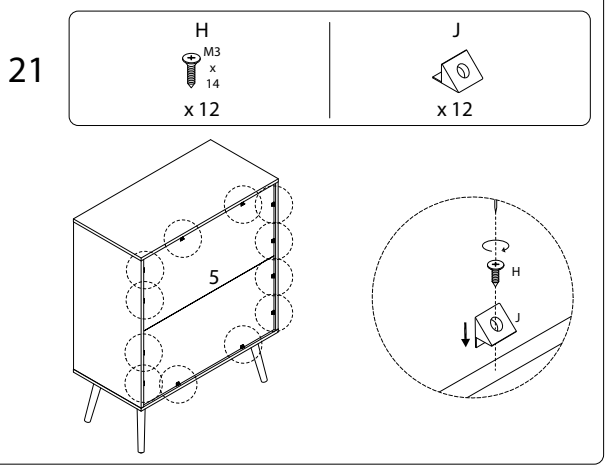

15/17

22

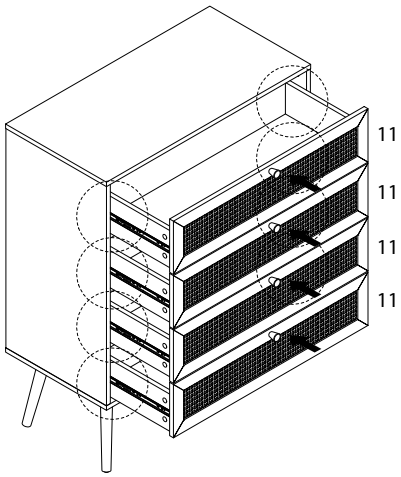

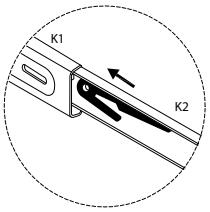

23

D	H	M	N
 M4 x 40	 M 3.5 x 14		
x 2	x 2	x 2	x 2

