FORSTER

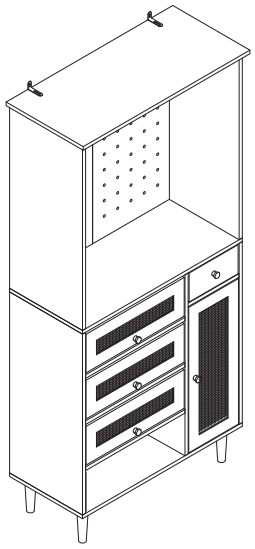

1/29

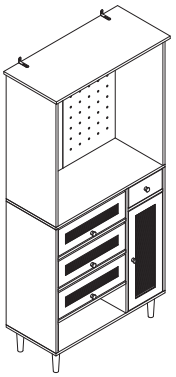

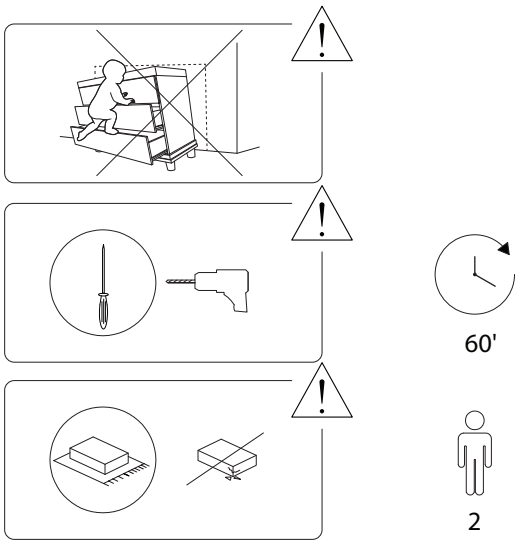

2/29

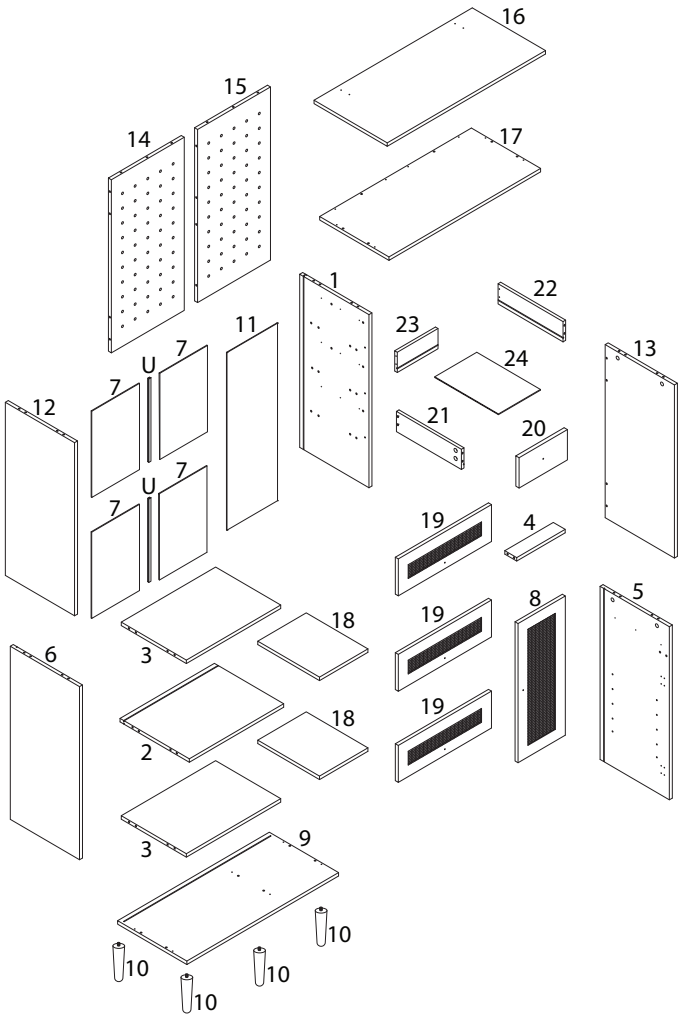

3/29

1 x 1	2 x 1	3 x 2	4 x 1	5 x 1
6 x 1	7 x 4	8 x 1	9 x 1	10 x 4
11 x 1	12 x 1	13 x 1	14 x 1	15 x 1
16 x 1	17 x 1	18 x 2	19 x 3	20 x 1
21 x 1	22 x 1	23 x 1	24 x 1	

4/29

2870/FORSTER/190826/

A	B	C
		
x 28	x 28	x 54
D	**E**	**F**
 M4 x 35	 M3.5 x 12	
x 20	x 30	x 12
G	**H**	**I1**
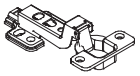	 M4 x 14	
x 2	x 12	x 5
I2	**J**	**K**
 M4 x 20		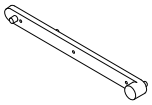
x 5	x 6	x 6
L	**M**	**N**
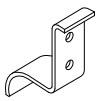	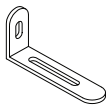	 M4 x 14
x 6	x 2	x 20

O	P	Q
 M3 x 16		
x 30	x 2	x 4
R	**S1**	**S2**
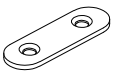		 M3 x 16
x 3	x 1	x 2
T	**U**	**V**
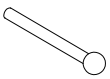		
x 6	x 2	x 8
W	**X**	**CL**
		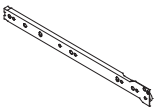
x 4	x 4	x 1
CR	**DL**	**DR**
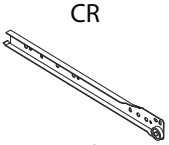	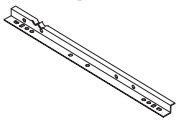	
x 1	x 1	x 1

1

1	A	CL	E	K	O	S1	S2
			 M3.5 x 12		 M3 x 16		 M3 x 16
x 1	x 3	x 1	x 3	x 3	x 9	x 1	x 2

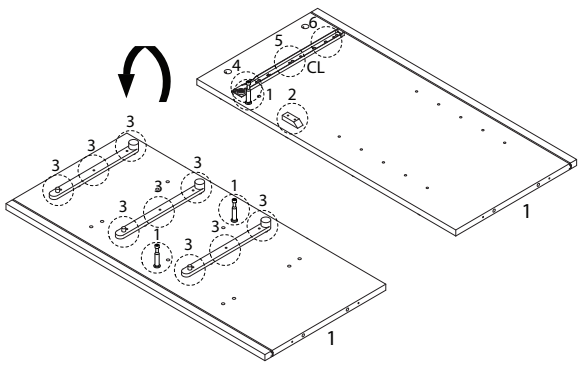

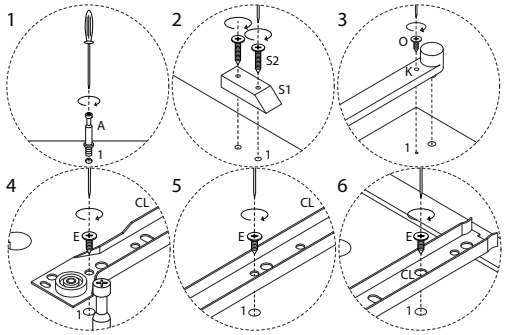

2

2	3	4	C
x 1	x 2	x 1	x 22

3

B
x 2

4

B
x 1

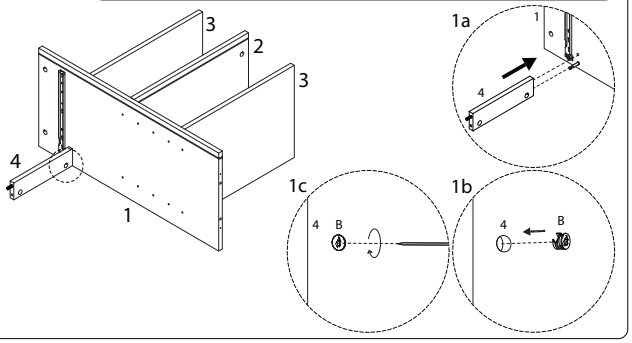

5

5	A	CR	E
x 1	x 1	x 1	x 3

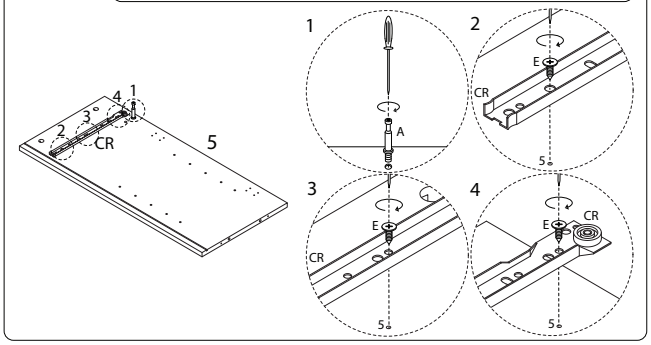

6

B
x 1

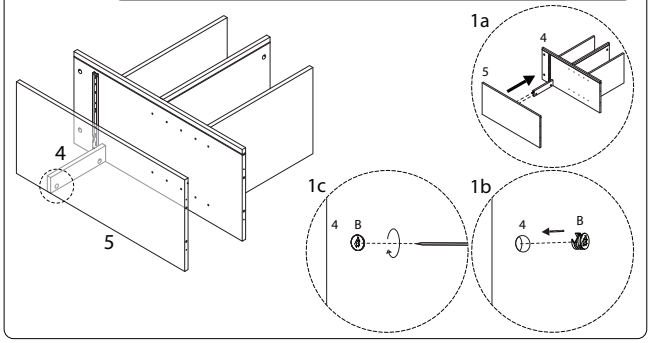

7

6	A	K	O
x 1	x 2	x 3	x 9

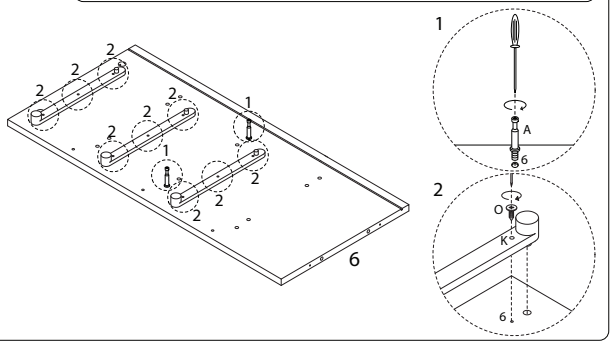

8

B
x 2

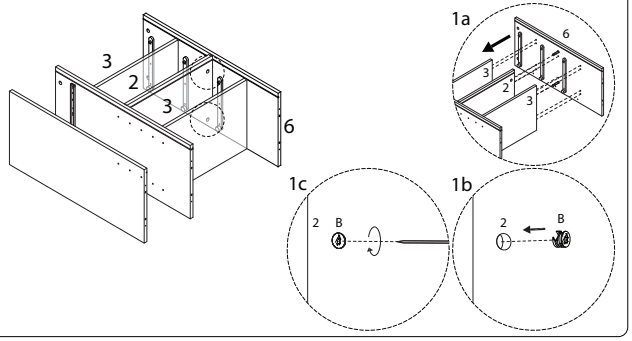

9

7	U
x 2	x 1

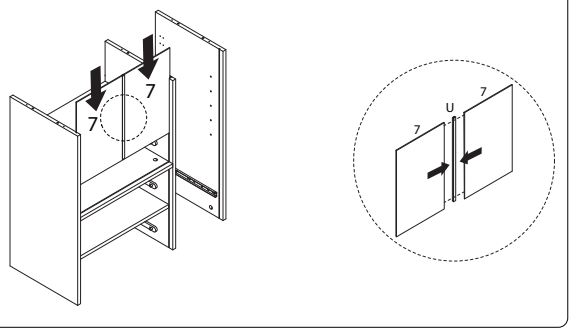

10

C
x 6

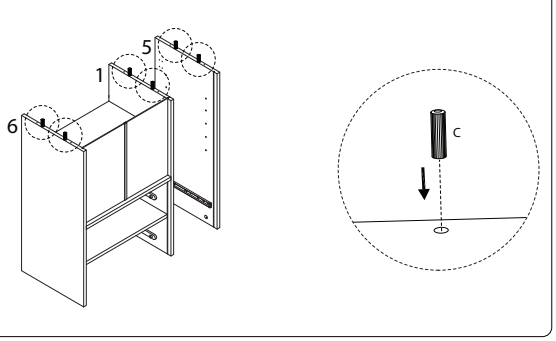

11

9	N	Q
x 1	x 16	x 4

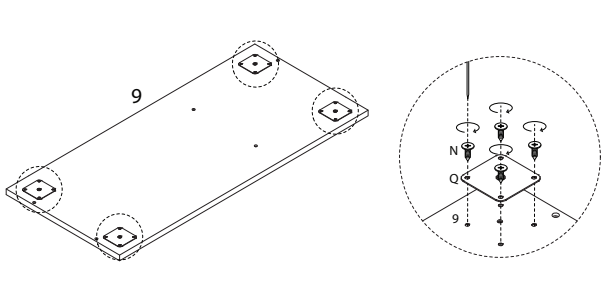

12

D
M4 x 35
x 6

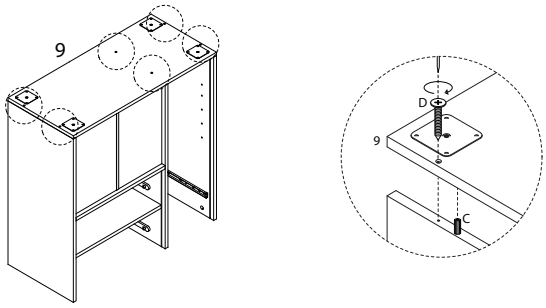

13

10
x 4

W
x 4

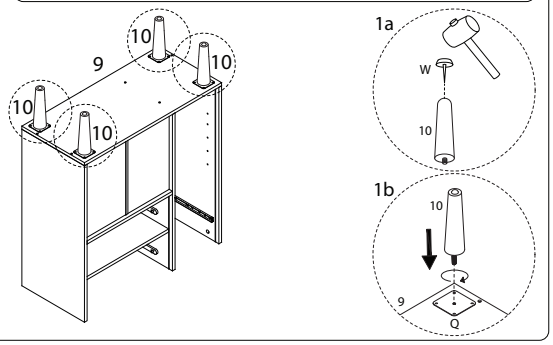

2870/FORSTER/190826/

14

7
x 2

11
x 1

C
x 1

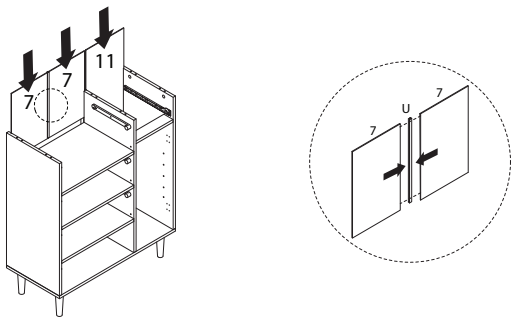

15

12
x 1

13
x 1

A
x 4

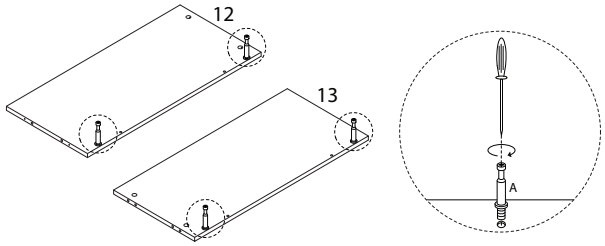

2870/FORSTER/190826/

16

14
x 1

15
x 1

C
x 8

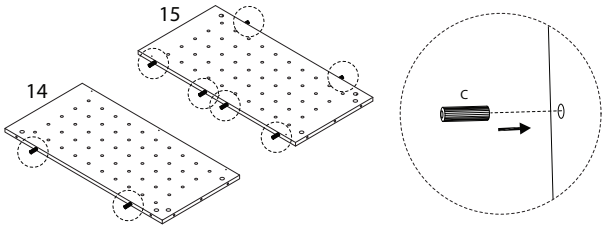

17

E
M3.5 x 12
x 6

R
x 3

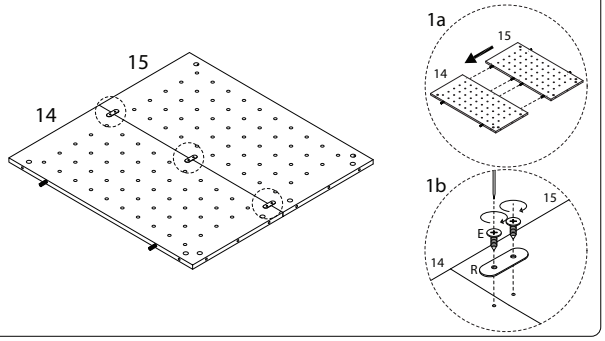

2870/FORSTER/190826/

18

B
x 4

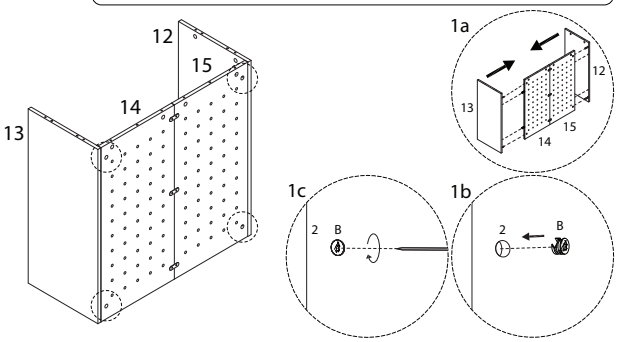

19

16
x 1

A
x 8

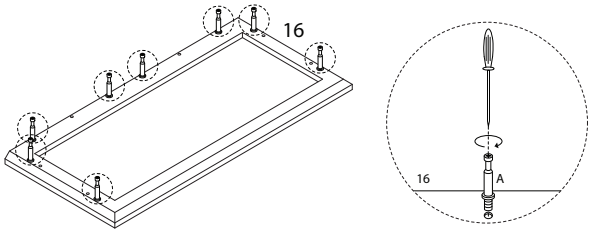

2870/FORSTER/190826/

20

C

x 6

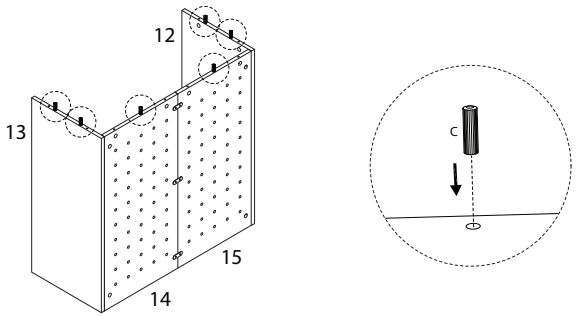

21

B

x 8

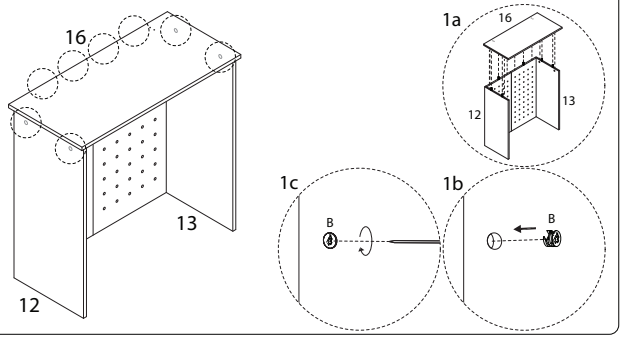

22

C

x 6

X

x 4

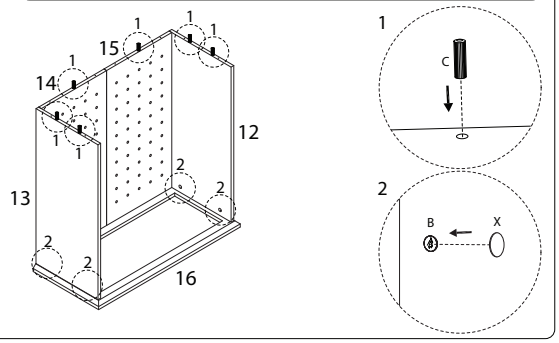

23

17

x 1

D

M4 x 35

x 8

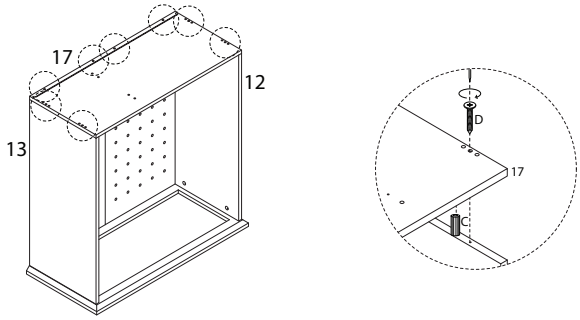

24

A

x 6

C

x 6

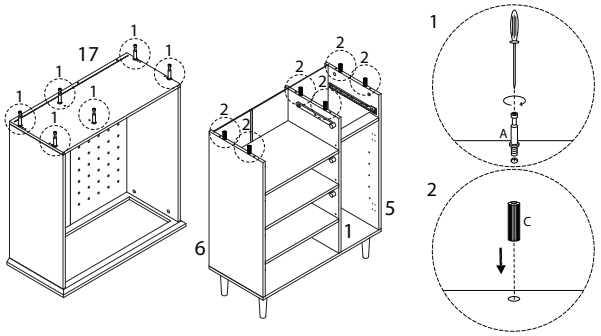

25

B

x 6

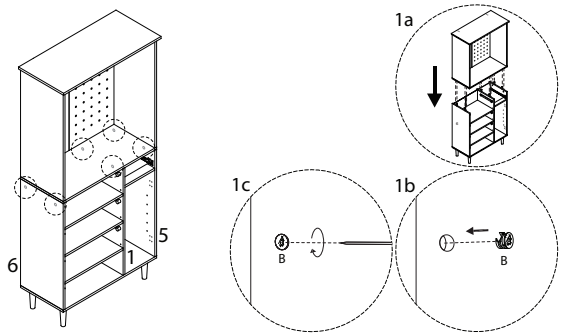

26

F

x 12

M

x 2

N

M4 x 14

x 4

O

M3 x 16

x 12

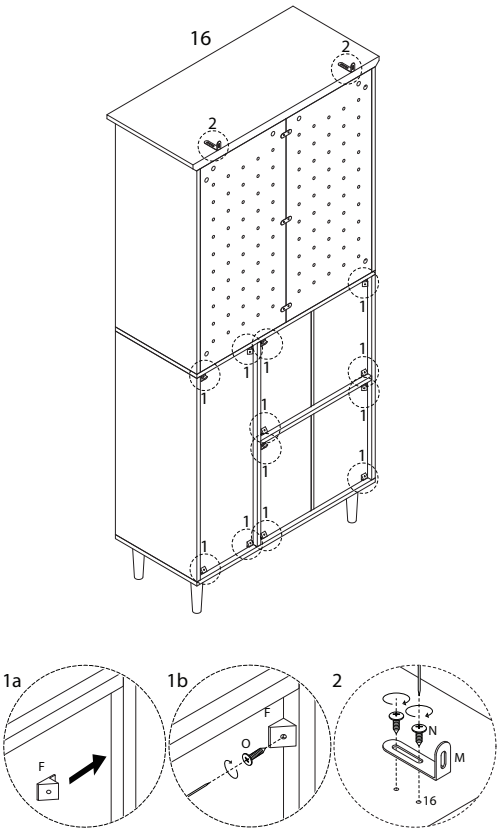

27

J	V
x 6	x 8

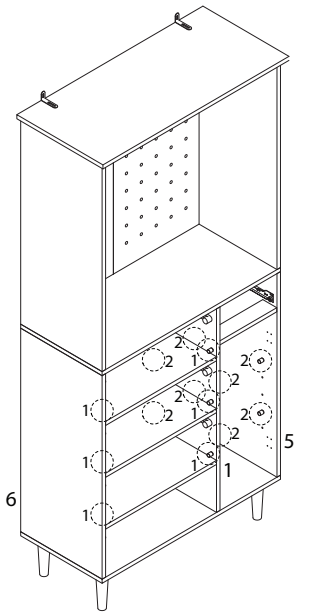

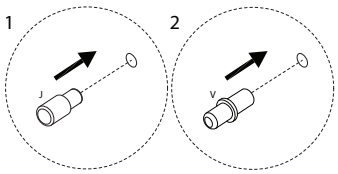

2870/FORSTER/190826/

28 x 3

19	E	I1	I2	L
x 1	M3.5 x 12 x 4	x 1	M4 x 20 x 1	x 2

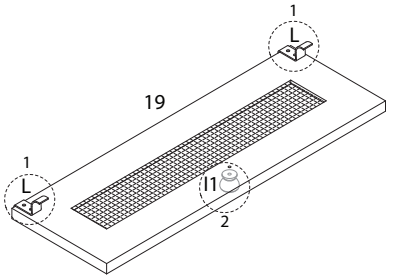

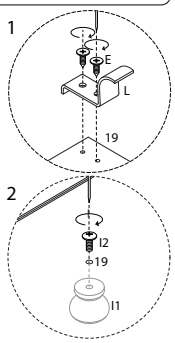

29

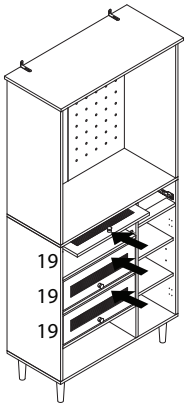

2870/FORSTER/190826/

30

21	22	23	D
x 1	x 1	x 1	M4 x 35 x 4

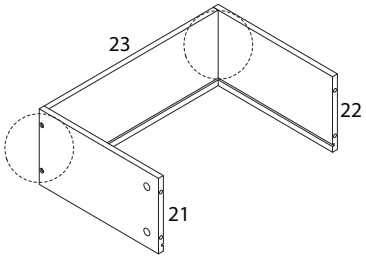

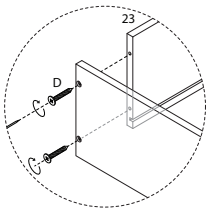

31

24
x 1

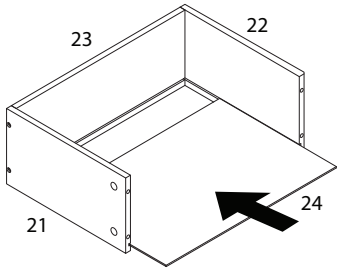

2870/FORSTER/190826/

32

20	A	I1	I2
x 1	x 4	x 1	M4 x 20 x 1

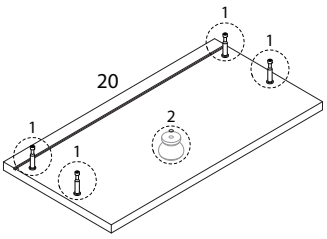

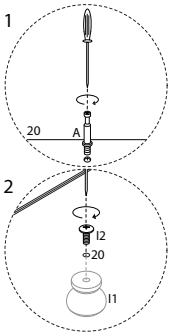

33

B
x 4

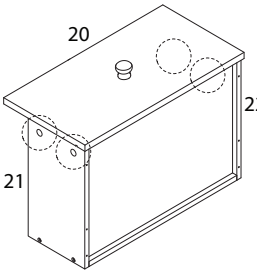

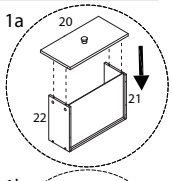

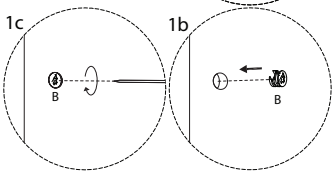

2870/FORSTER/190826/

34

DL	DR	E
x 1	x 1	x 6

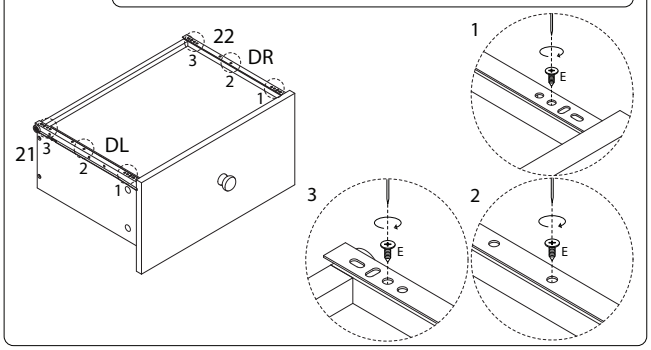

35

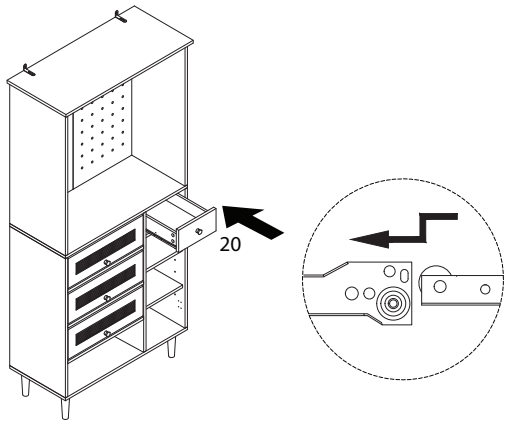

36

8	G	H	I1	I2
x 1	x 2	x 4	x 1	x 1

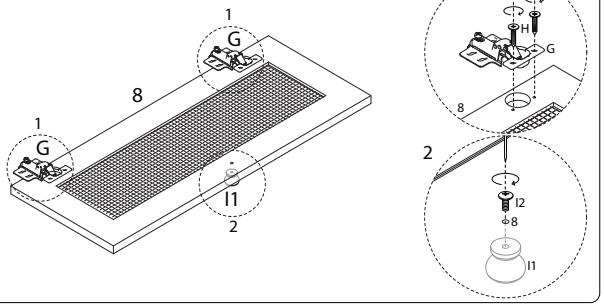

37

H
x 8

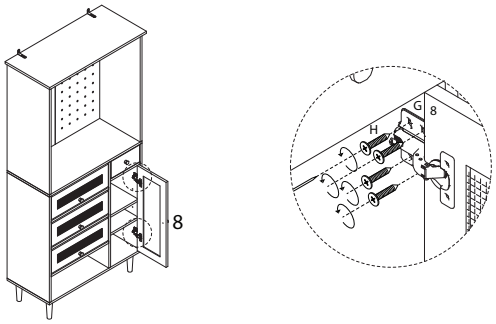

!

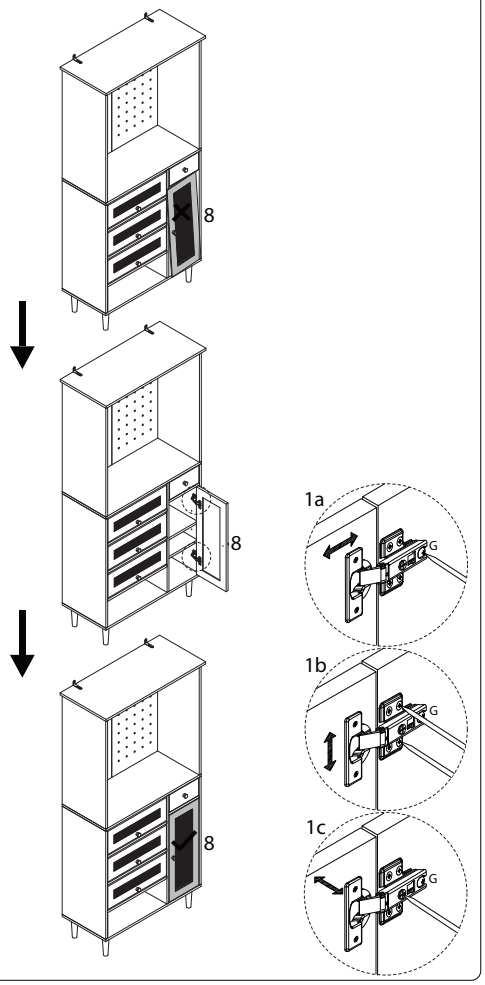

38

T
x 6

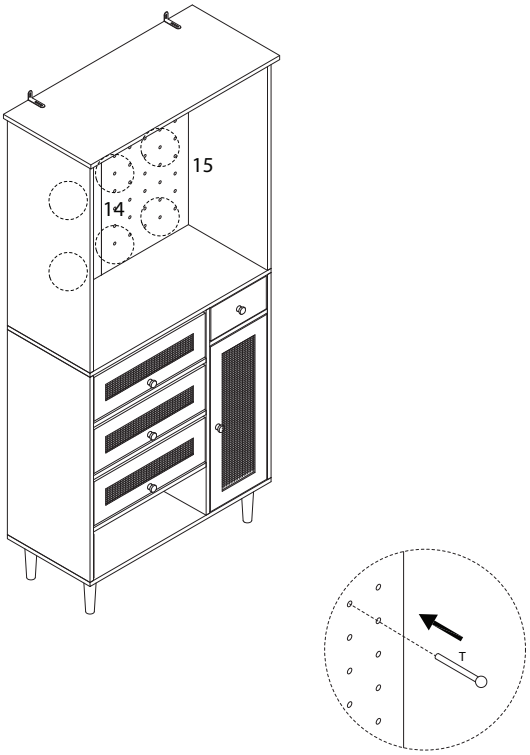

39

D	P
 M4 x 35	
x 2	x 2

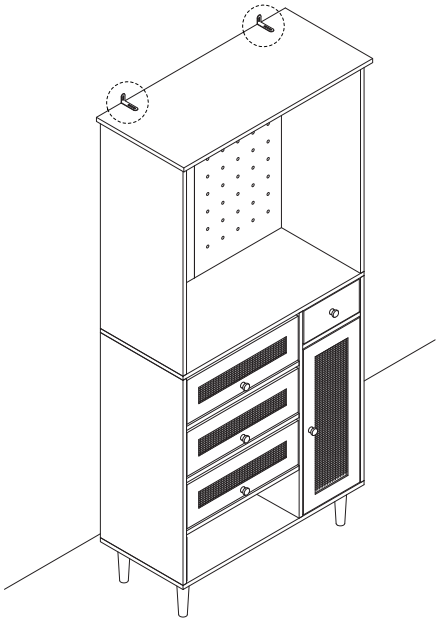

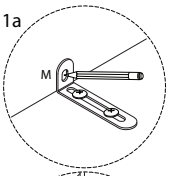

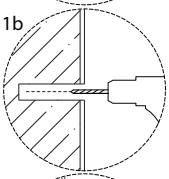

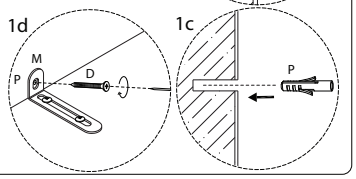

2870/FORSTER/190826/