GRIFFITH

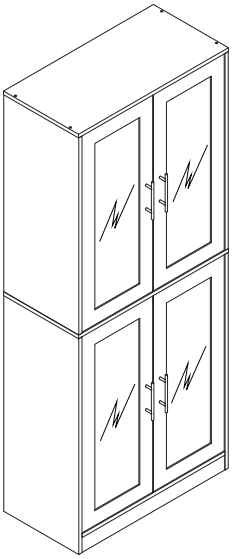

1/19

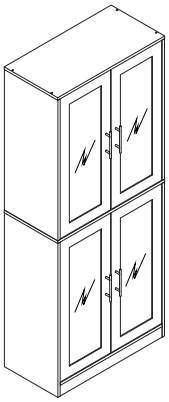

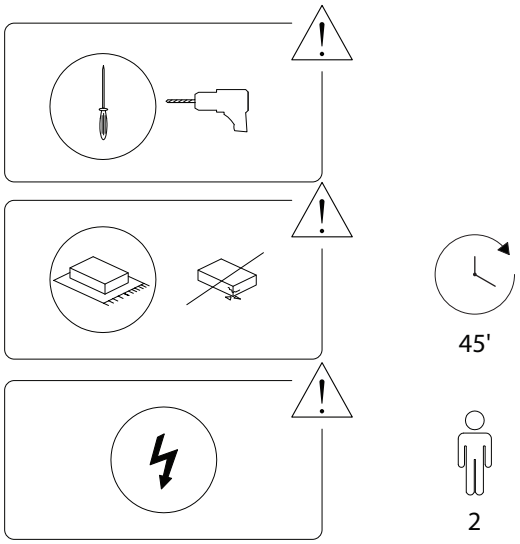

2/19

2754/GRIFFITH/130626/

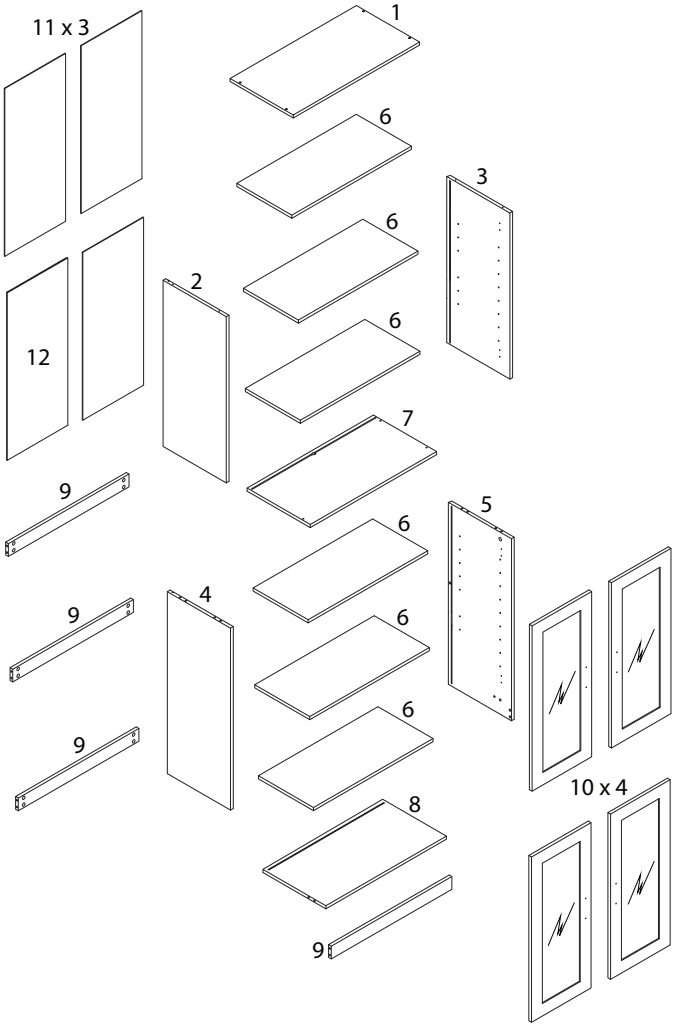

3/19

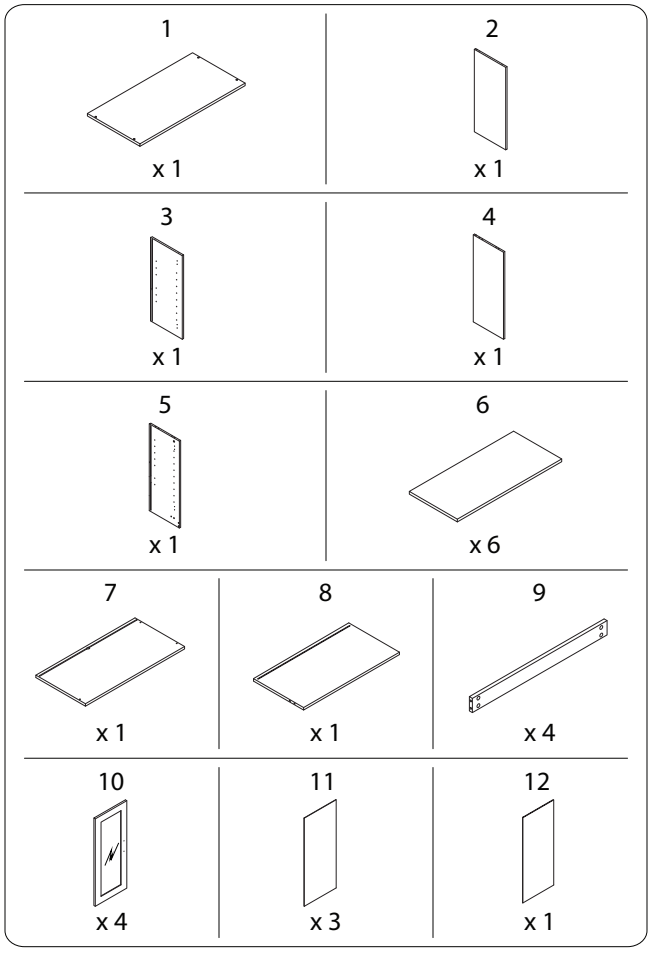

4/19

2754/GRIFFITH/130626/

A	B	C	D
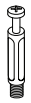			
x 24	x 24	x 8	x 52
E	**F**	**G1**	**G2**
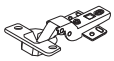	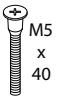		
x 8	x 8	x 4	x 8
H	**I**	**J**	**K1**
			
x 2	x 24	x 2	x 2

K2	K3	K4	K5	L1
				
x 4	x 2	x 2	x 2	x 1

L2	L3	M	N	O
				
x 1	x 1	x 24	x 24	x 1

1

2	3	4	5	7	A	O
x 1	x 1	x 1	x 1	x 1	x 24	x 1

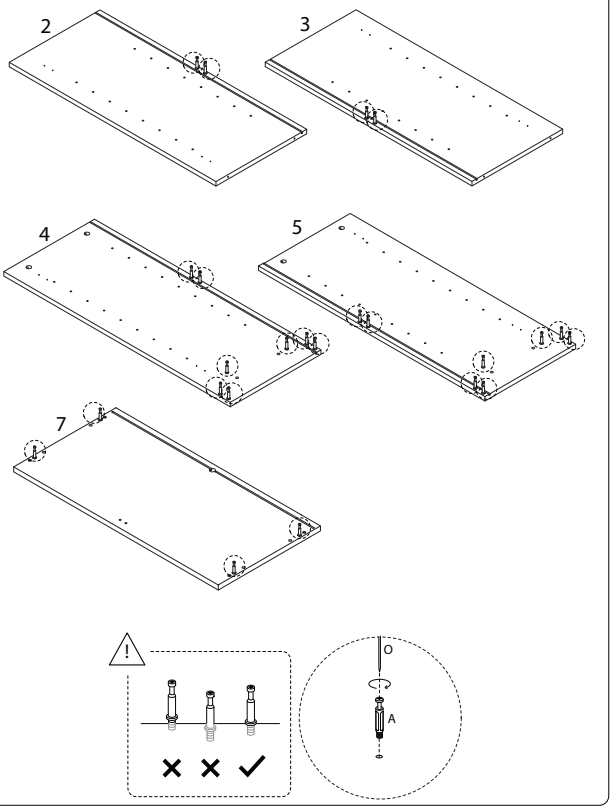

2

1	D	H	O
x 1	x 4	x 2	x 1

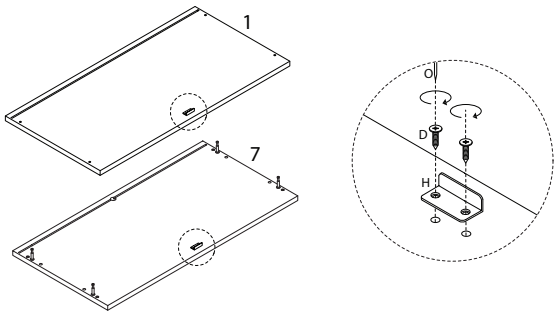

4

9	B	O
x 1	x 4	x 1

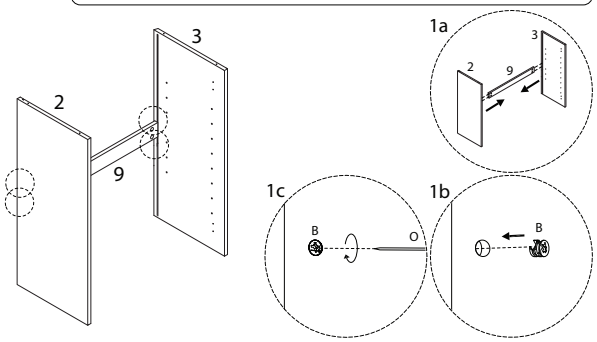

3 x 4

10	D	E	G1	G2	O
x 1	x 4	x 2	x 1	x 2	x 1

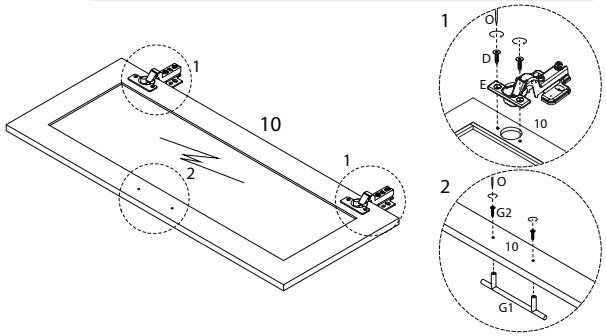

5

F	O
x 4	x 1

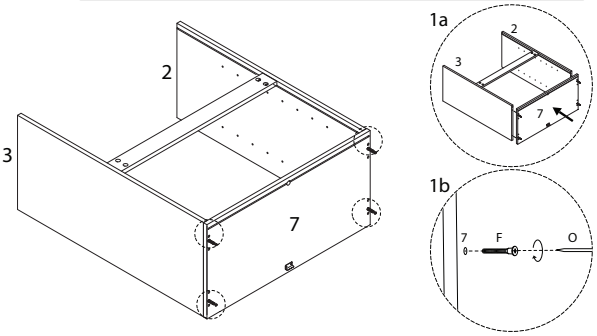

6

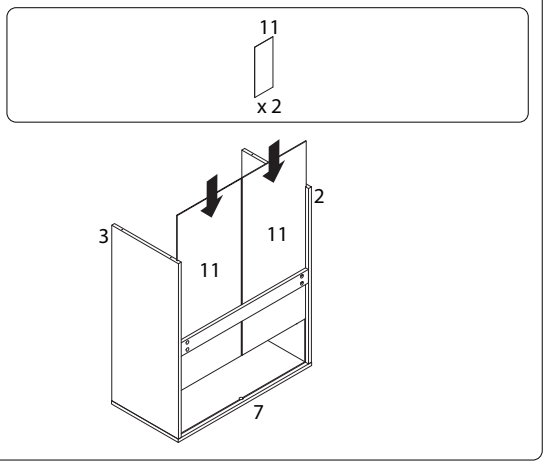

8

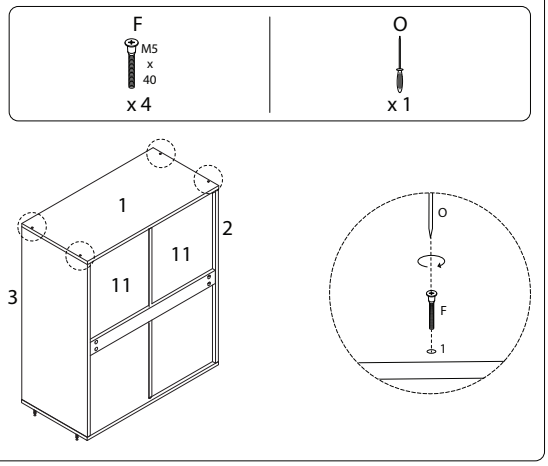

7

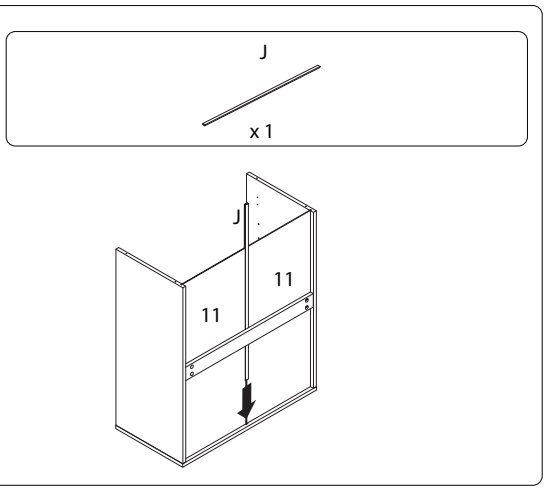

9

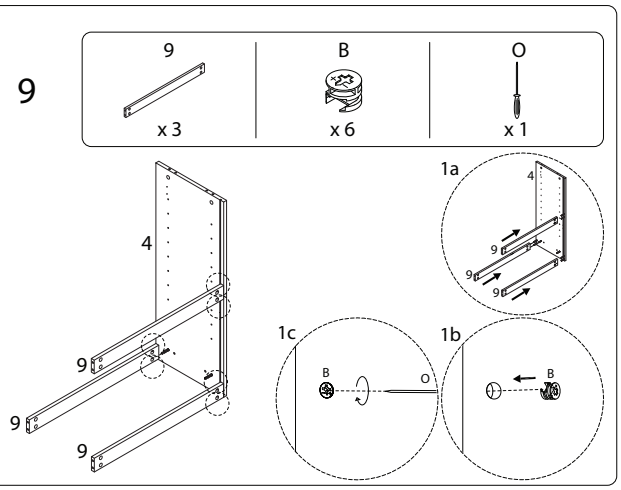

10

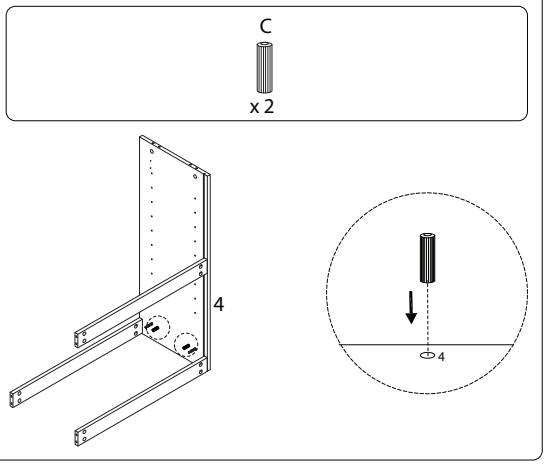

12

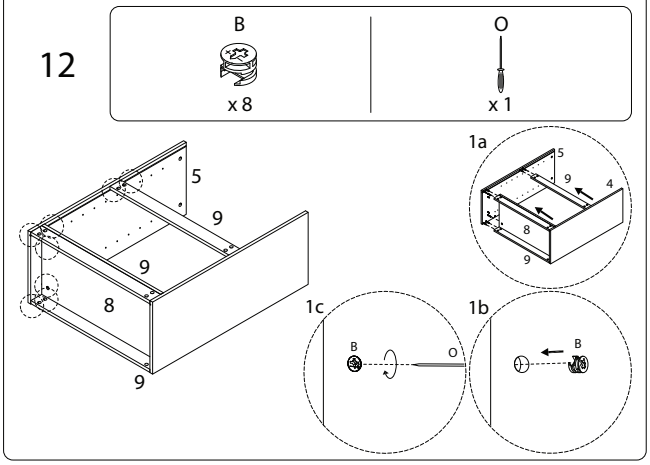

11

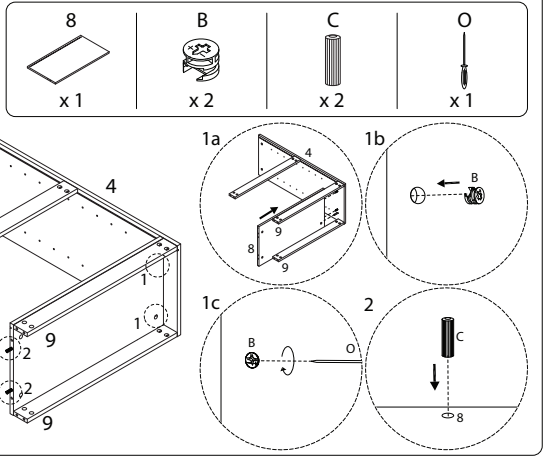

13

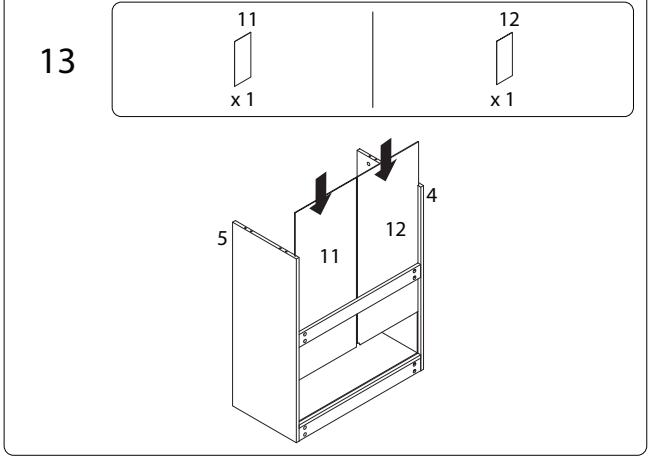

14

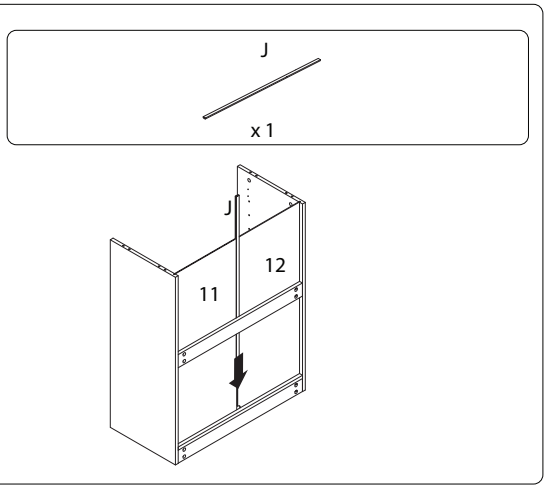

15

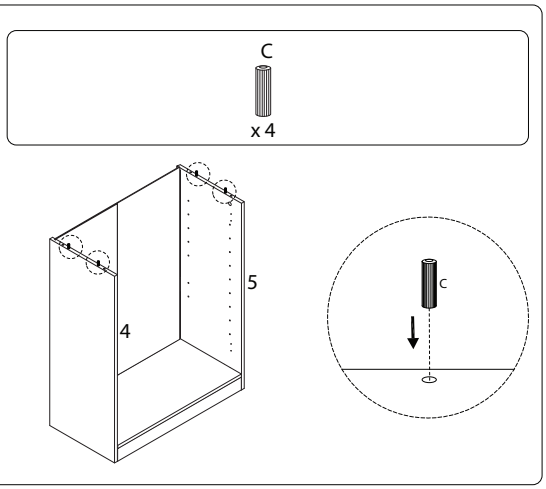

13/19

16

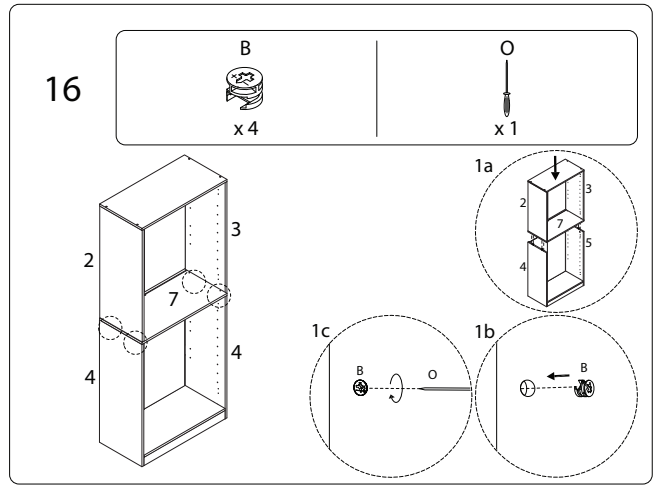

17

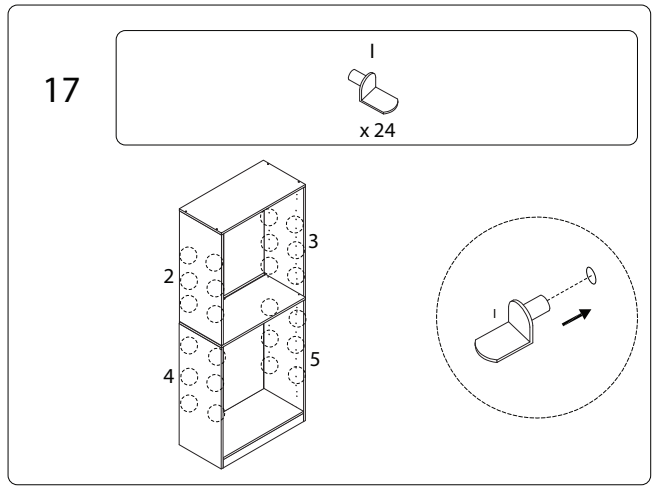

14/19

18

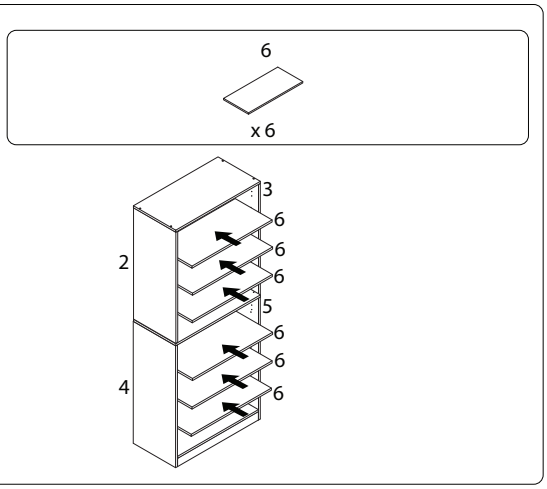

19

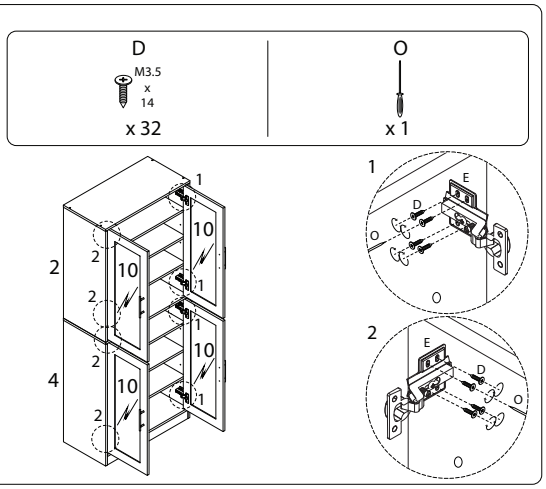

15/19

20

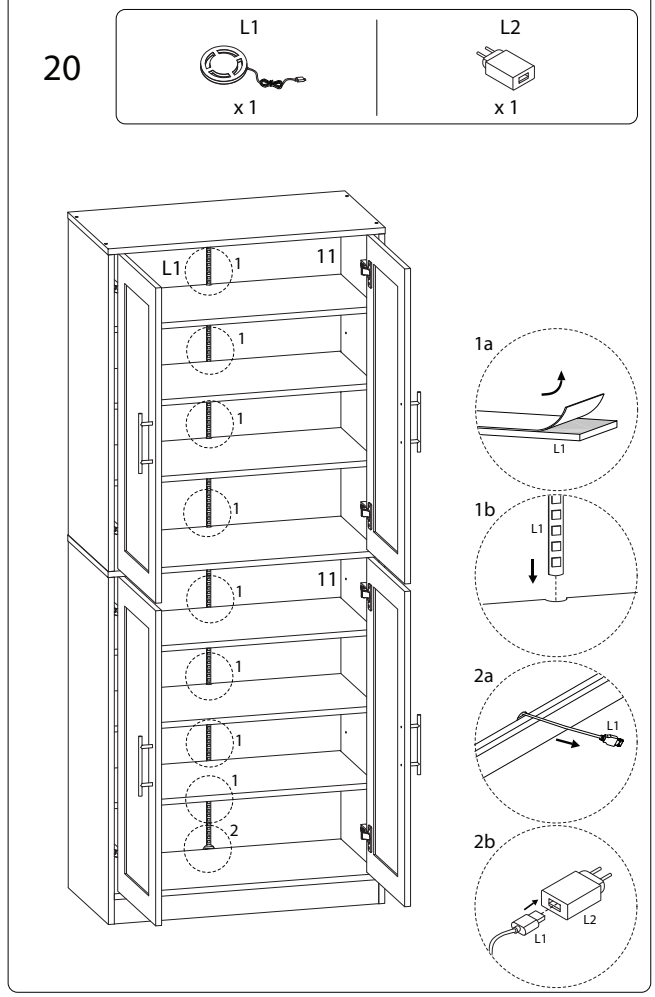

16/19

21

M	N	O
x 24	M3 x 12 x 24	x 1

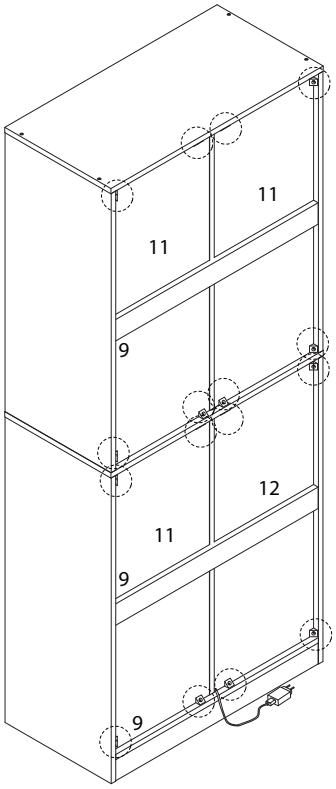

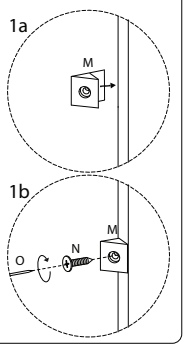

22

K1	K2	K3	K4	K5	L3	O
x 2	x 4	x 2	M3.5 x 12 x 2	M4 x 35 x 2	x 1	x 1

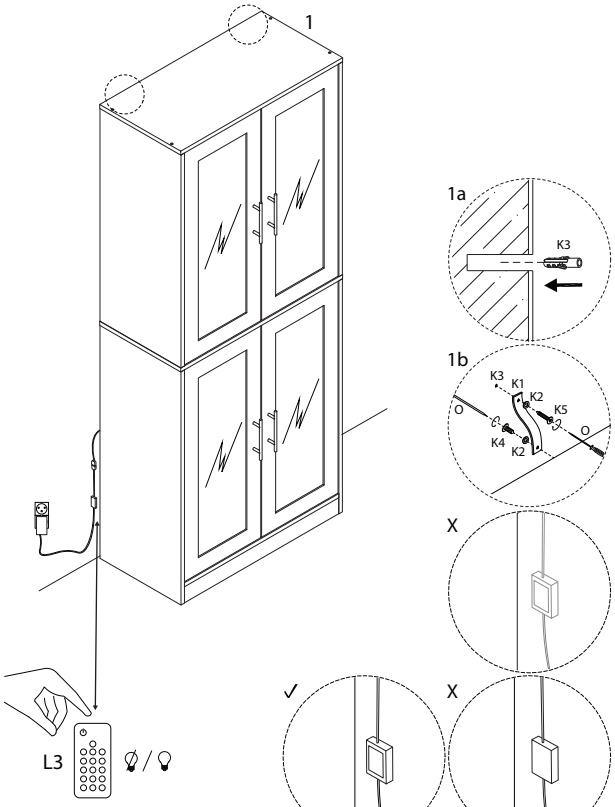

23

