# DORVAL

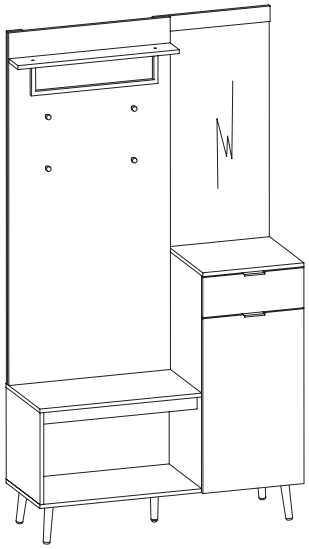



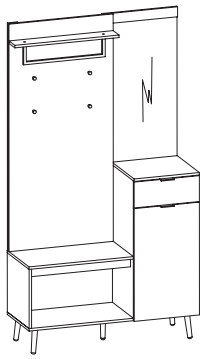

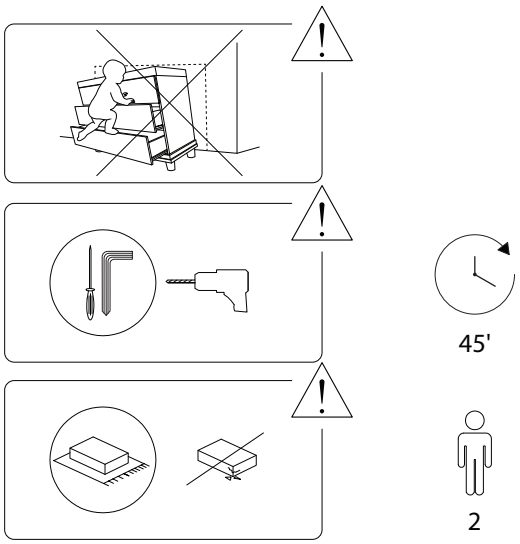






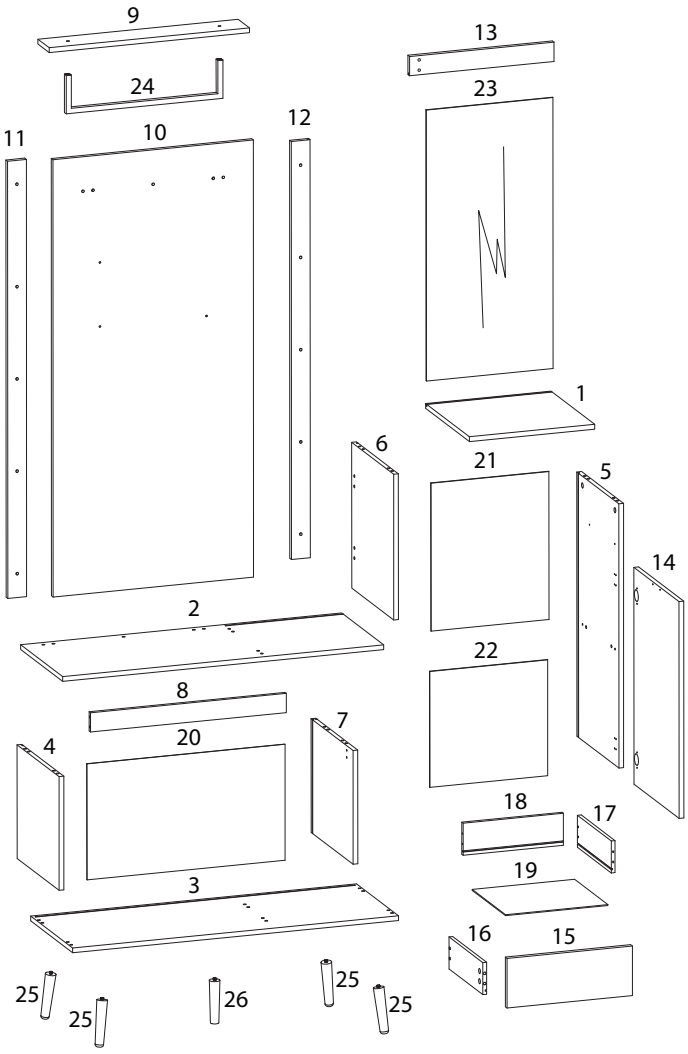






| | | | |
|---|---|---|---|
| 1 x 1 | 2 x 1 | 3 x 1 | 4 x 1 |
| 5 x 1 | 6 x 1 | 7 x 1 | 8 x 1 |
| 9 x 1 | 10 x 1 | 11 x 1 | 12 x 1 |
| 13 x 1 | 14 x 1 | 15 x 1 | 16 x 1 |
| 17 x 1 | 18 x 1 | 19 x 1 | 20 x 1 |

| 21 | 22 | 23 |
|---|---|---|
| 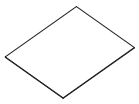 | 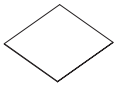 | 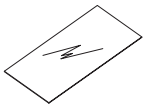 |
| x 1 | x 1 | x 1 |

| 24 | 25 |
|---|---|
| 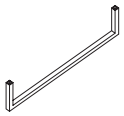 |  |
| x 1 | x 4 |

| 26 | A |
|---|---|
|  |  |
| x 1 | x 18 |

| B | C |
|---|---|
|  |  |
| x 18 | x 24 |

| CL | CR | D |
|---|---|---|
| 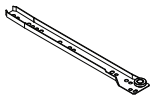 | 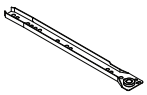 |  M4 x 35 |
| x 1 | x 1 | x 22 |





| DL | DR | E | F |
|---|---|---|---|
| 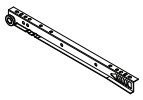 | 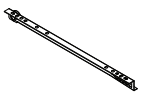 |  M3.5 x 14 | 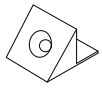 |
| x 1 | x 1 | x 36 | x 12 |

| G | H | I | J |
|---|---|---|---|
|  |  M4 x 20 |  M4 x 14 |  M3.5 x 14 |
| x 4 | x 4 | x 2 | x 24 |

| K | L | M | N |
|---|---|---|---|
|  |  | 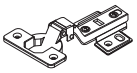 |  |
| x 1 | x 8 | x 2 | x 1 |

| O | P | Q | R |
|---|---|---|---|
|  |  | 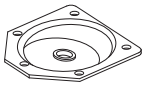 | 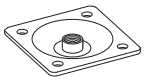 |
| x 2 | x 2 | x 4 | x 1 |

| S | T | U | V |
|---|---|---|---|
| 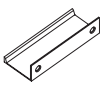 |  |  M6 x 25 |  M6 x 35 |
| x 2 | x 4 | x 12 | x 2 |





## 1

| 10 | 11 | 12 | K | U |
|---|---|---|---|---|
| x 1 | x 1 | x 1 | x 1 | M6 x 25 x 10 |

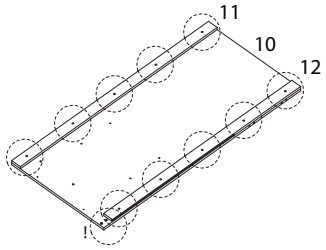


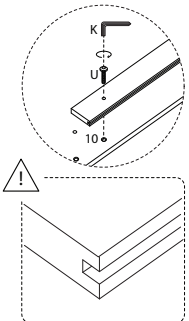


## 3

| 9 | 24 | K | V |
|---|---|---|---|
| x 1 | x 1 | x 1 | M6 x 35 x 2 |

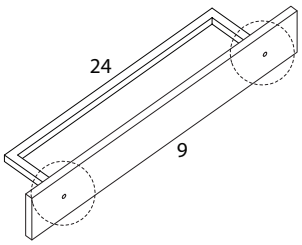


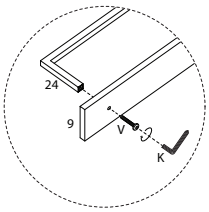


## 2

| 13 | K | U |
|---|---|---|
| x 1 | x 1 | M6 x 25 x 2 |

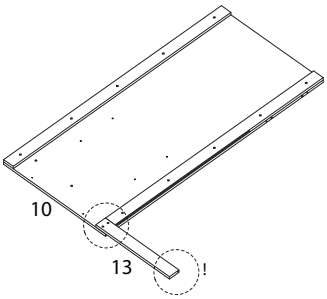


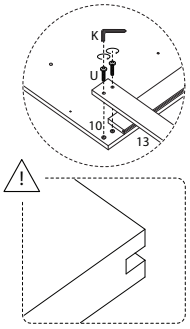


## 4

| C |
|---|
| x 4 |

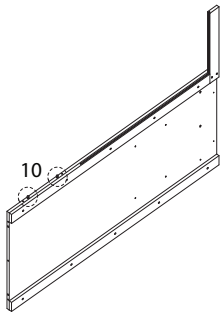


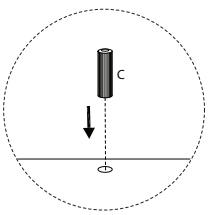

5

D
M4 x 35
x 3

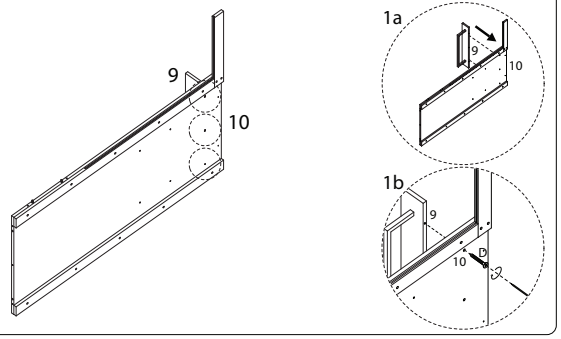


6

G
x 4

H
M4 x 20
x 4

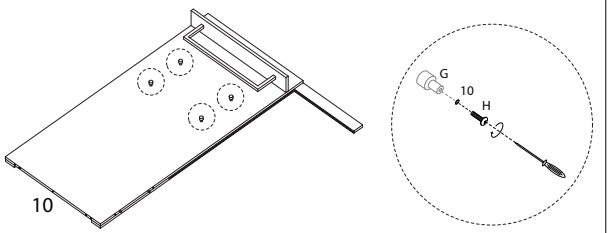






7

6
x 1

CL
x 1

E
M3.5 x 14
x 2

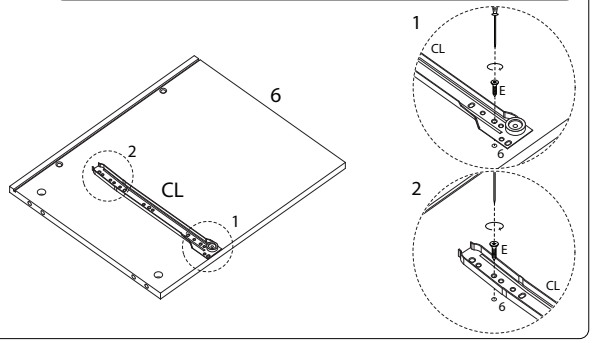


8

D
M4 x 35
x 2

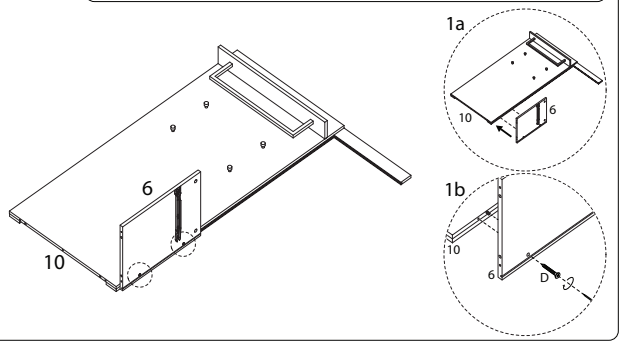






9

5
x 1

A
x 2

CR
x 1

E
M3.5 x 14
x 2

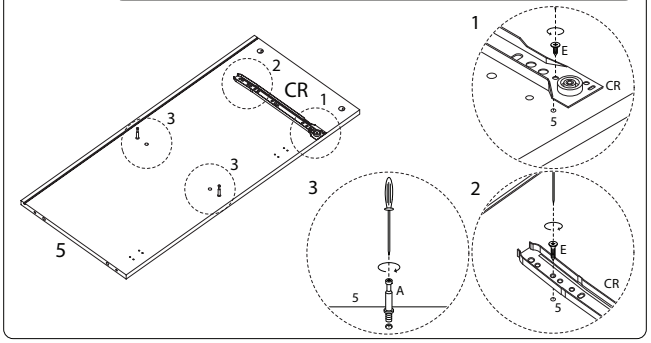


10

C
x 4

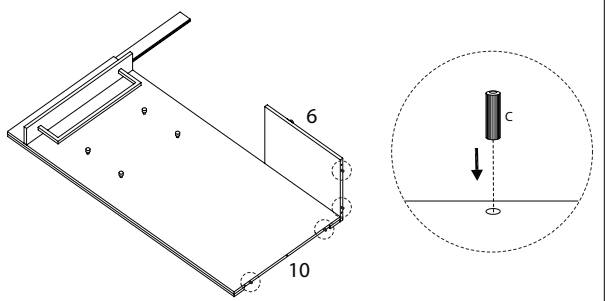






11

2
x 1

D
M4 x 35
x 5

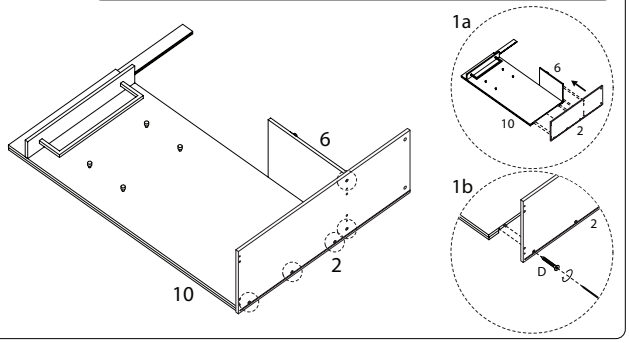


12

C
x 2

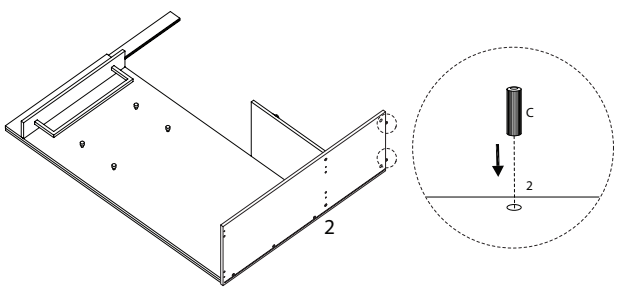

13

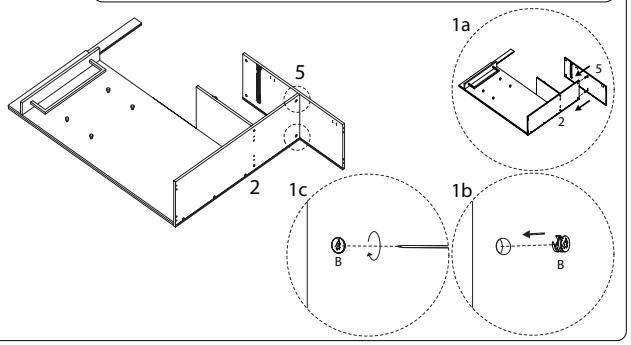


14

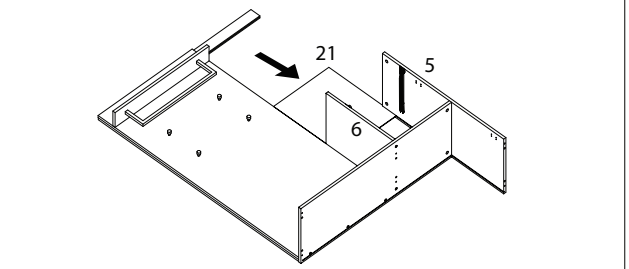






15

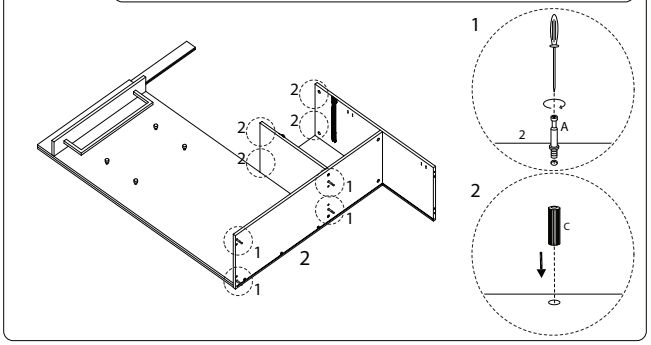


16

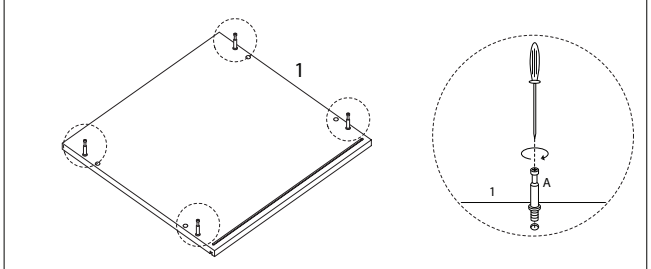






17

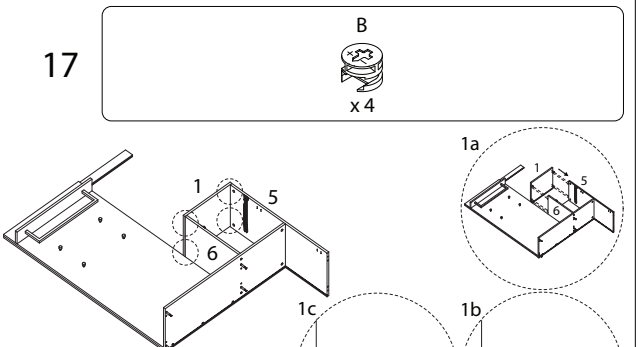


18

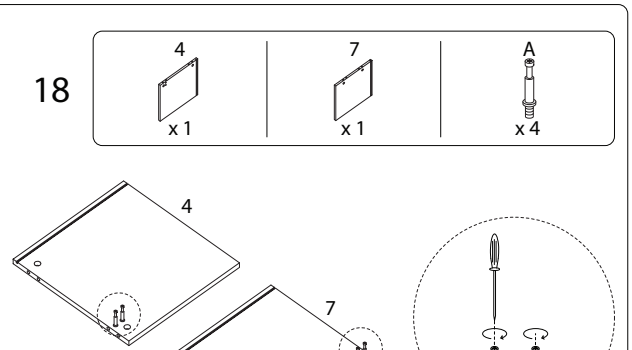






19

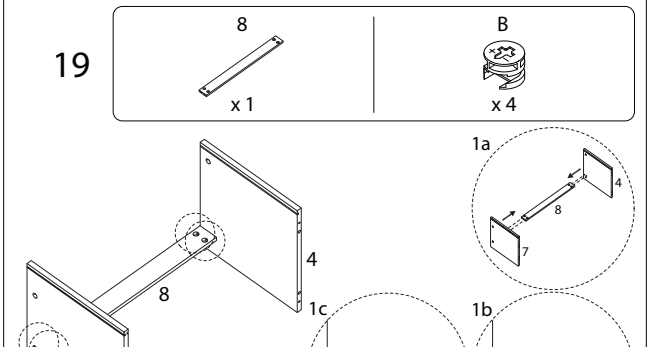


20

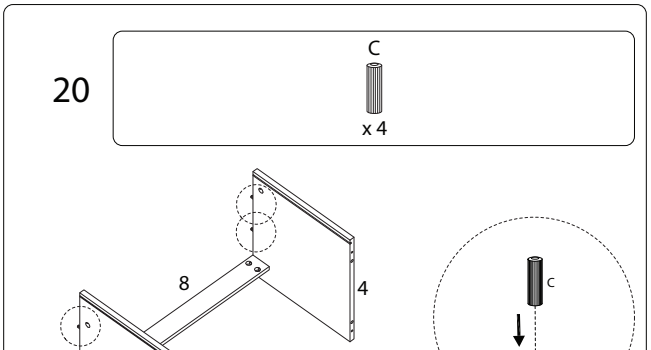

21

B

x 4

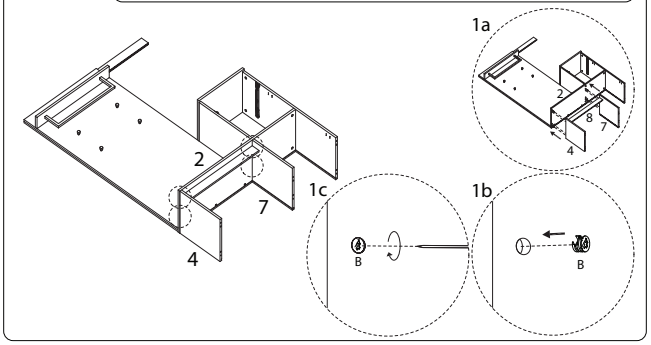


22

20

x 1

22

x 1

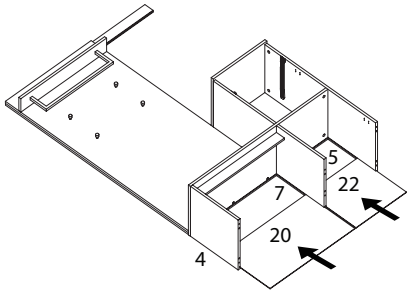






23

C

x 6

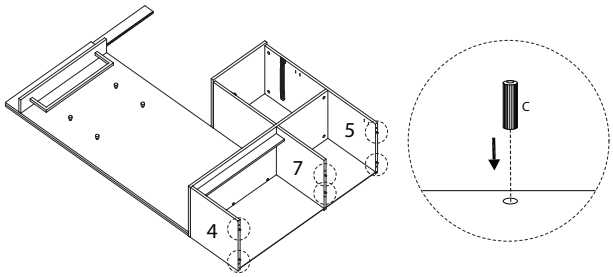


24

D

M4 x 35

x 6

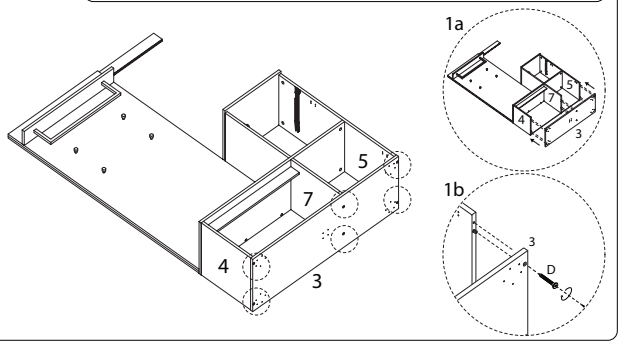






25

E

M3.5 x 14

x 24

Q

x 4

R

x 1

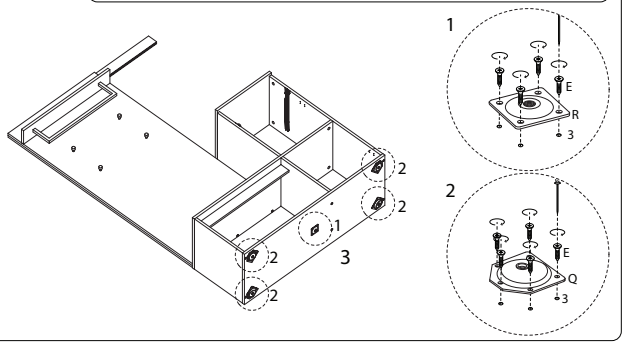


27

N

x 1

T

x 4

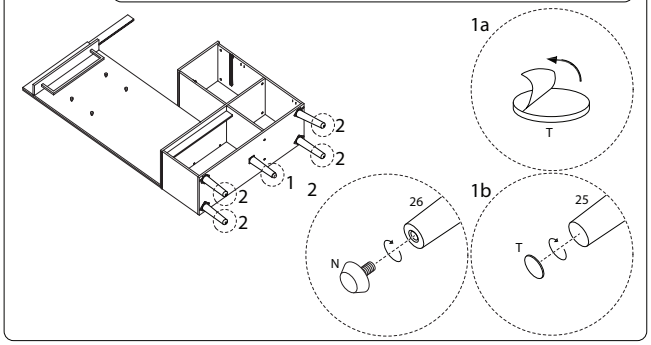


26

25

x 4

26

x 1

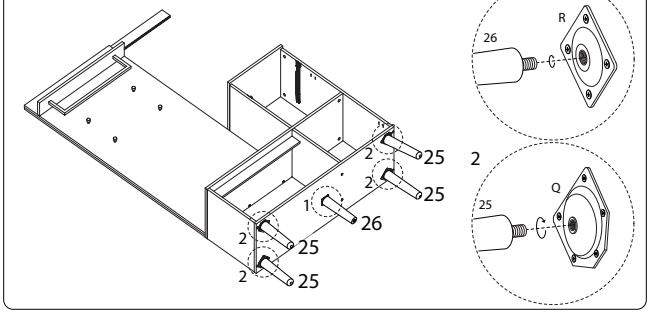






28

F

x 12

J

M3.5 x 14

x 12

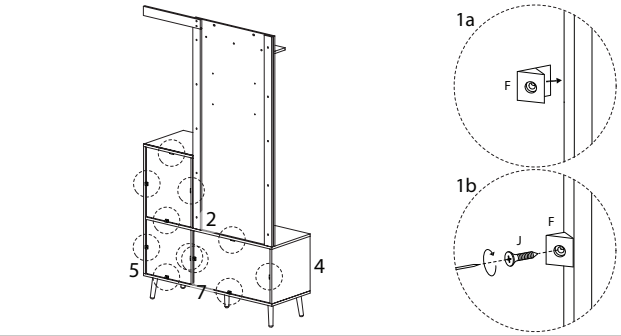

29

I
M4 x 14
x 2

O
x 2

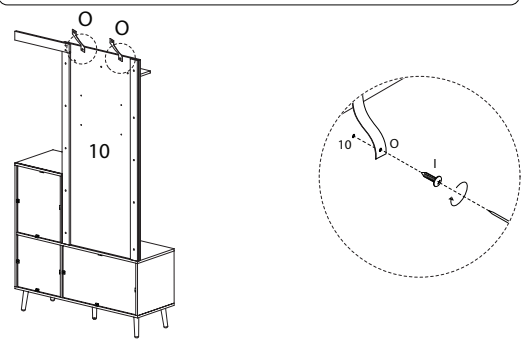


30

23
x 1

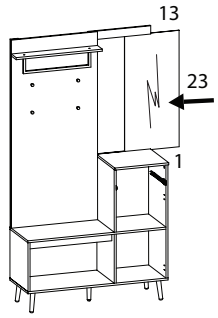






31

L
x 4

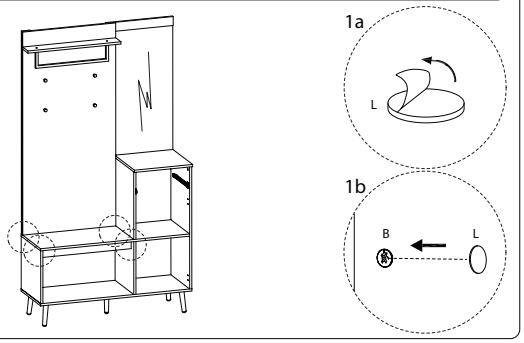


32

15
x 1

A
x 4

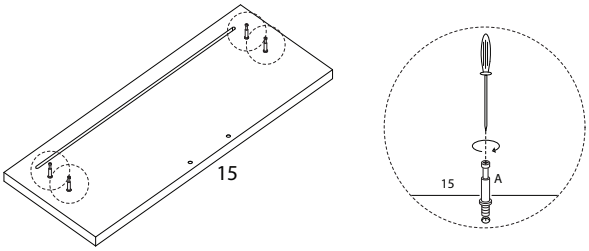






33

E
M3.5 x 14
x 2

S
x 1

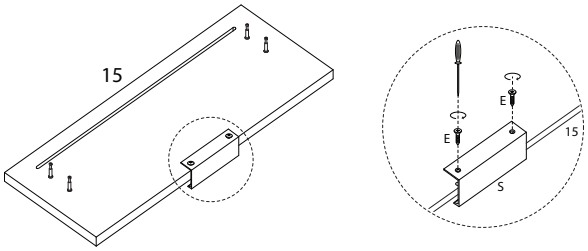


35

19
x 1

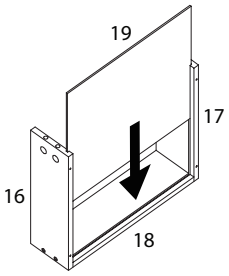


34

16
x 1

17
x 1

18
x 1

D
M4 x 35
x 4

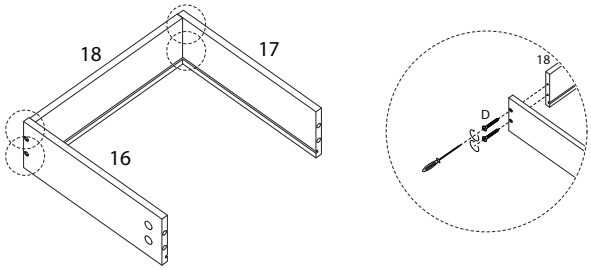






36

B
x 4

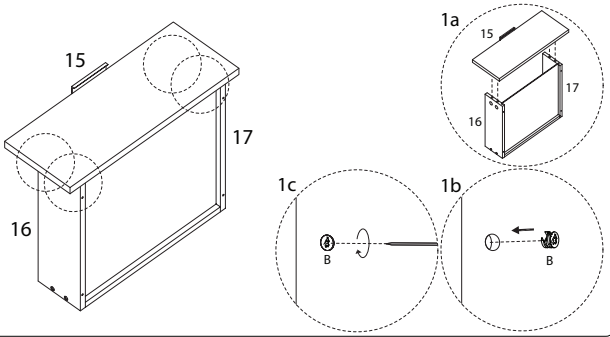

## 37

L
x 4

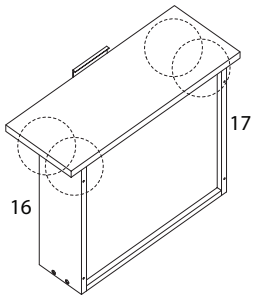


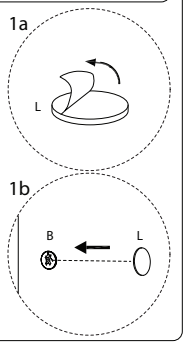


## 38

DL
x 1

DR
x 1

E
M3.5 x 14
x 4

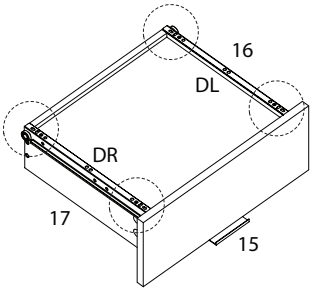


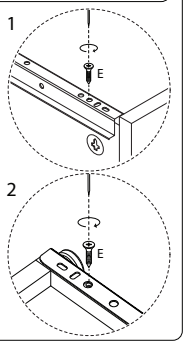






## 39

14
x 1

M
x 2

J
M3.5 x 14
x 4

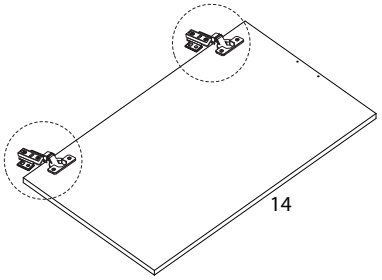


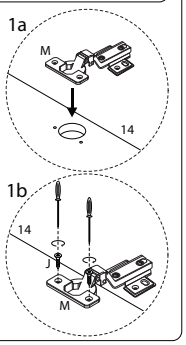


## 40

E
M3.5 x 14
x 2

S
x 1

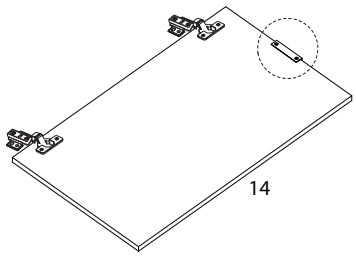


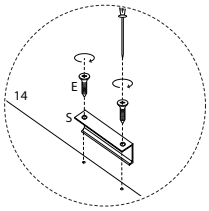






## 41

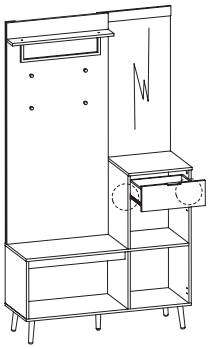

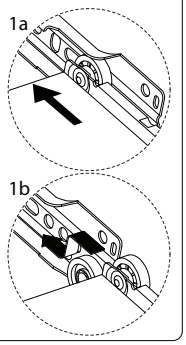


## 43

P
x 2

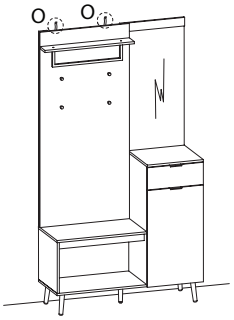


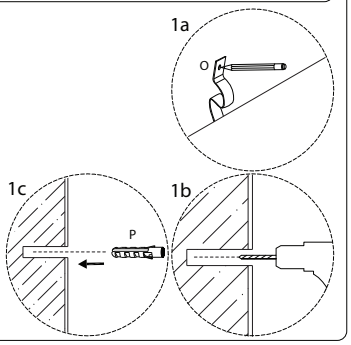


## 42

J
M3.5 x 14
x 8

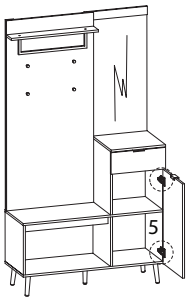


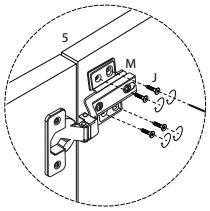






## 44

D
M4 x 35
x 2

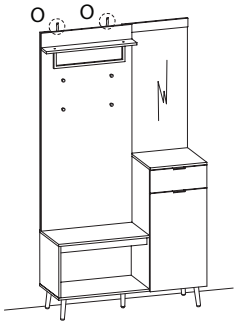


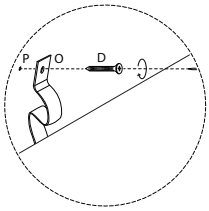

45

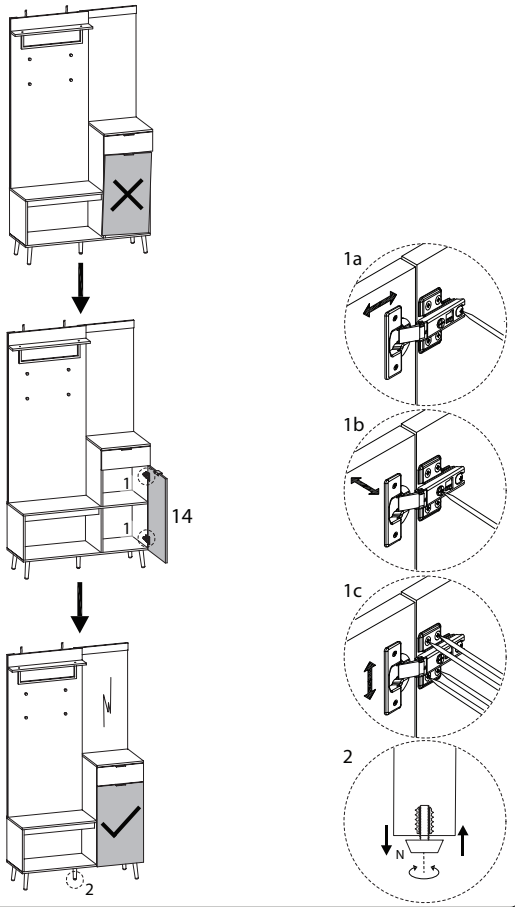







1794/DORVAL/041126/