KOTMALE

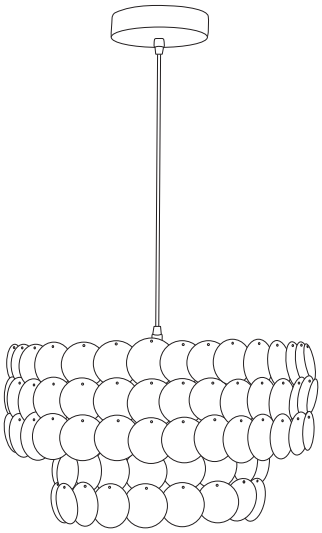

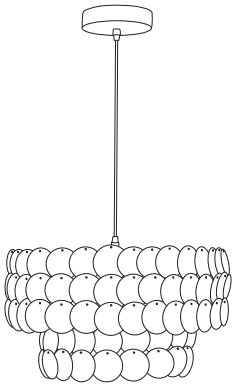

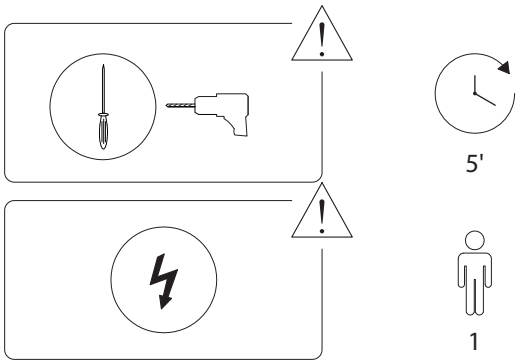

1/4

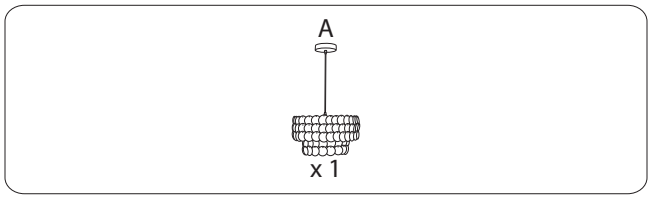

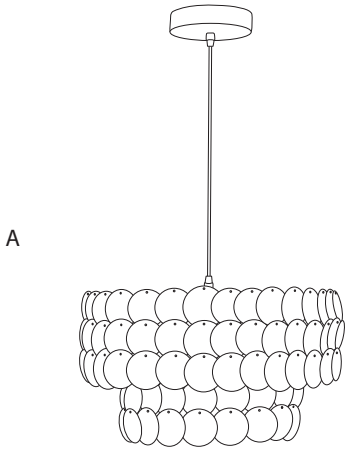

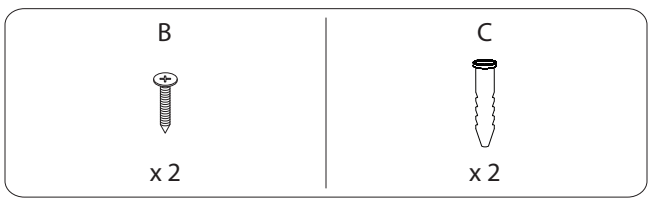

2/4

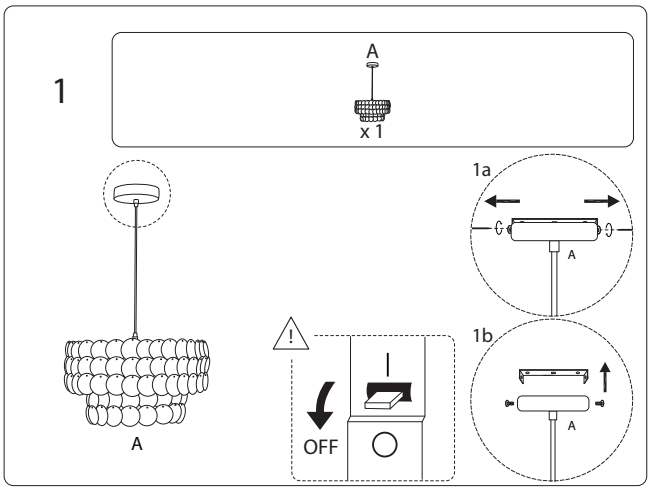

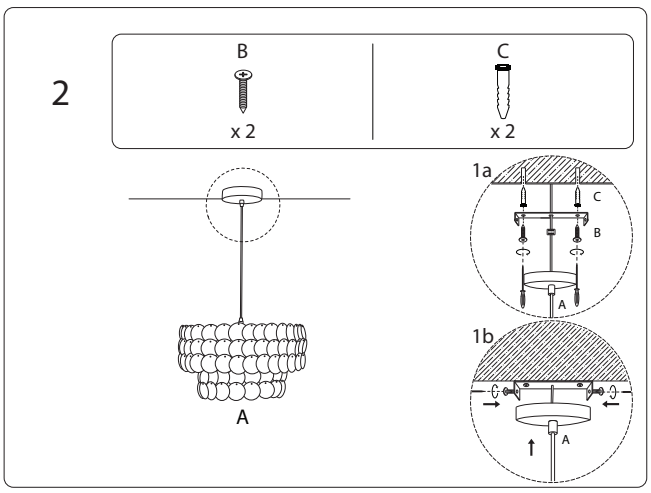

3/4

3

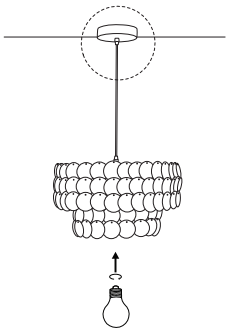

2401/KOTMALE/260825/