AGUIRRE





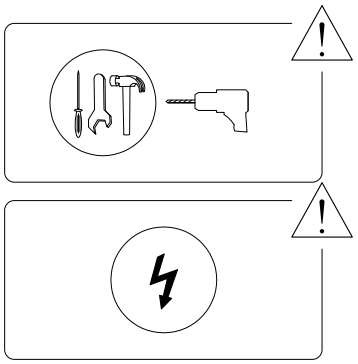



60'

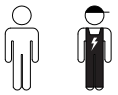

2 1

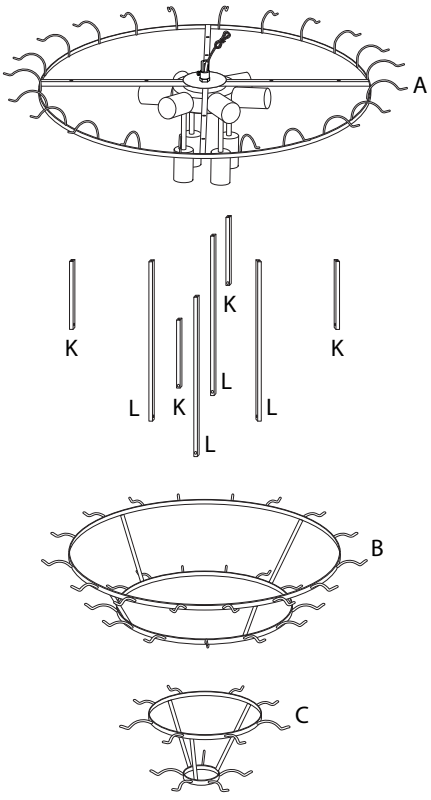

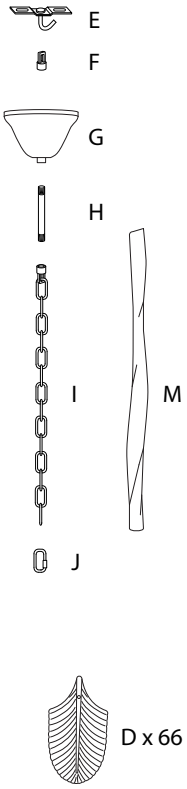

A 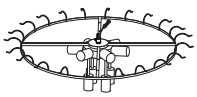 x 1	B  x 1	C  x 1
D  x 66	E 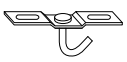 x 1	F  x 1
G  x 1	H x 1	I x 1	J  x 1
K x 4	L x 4	M x 1	N  x 8
O x 8	P  x 2	R  x 4	S  x 1

1

A

x 1

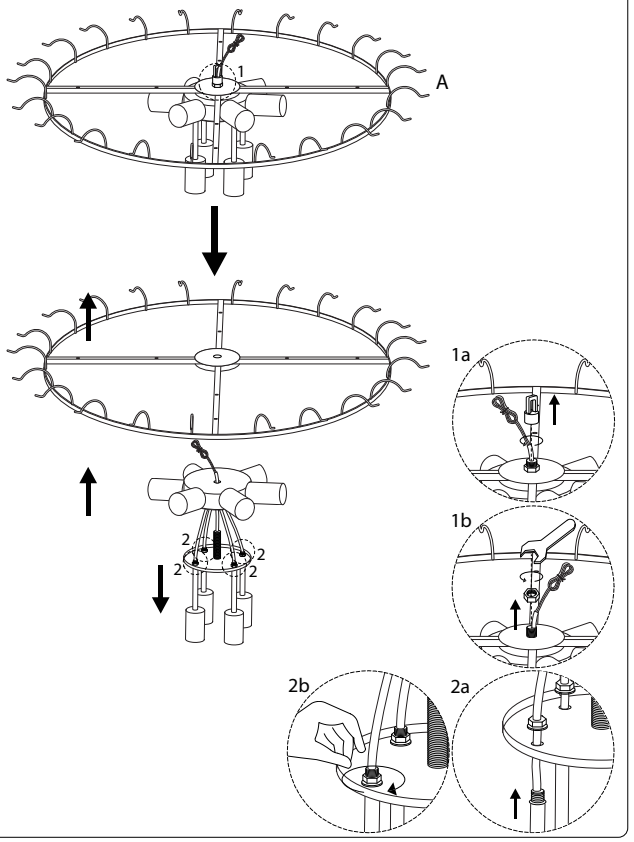

2613/AGUIRRE/250825/

2

R

x 1

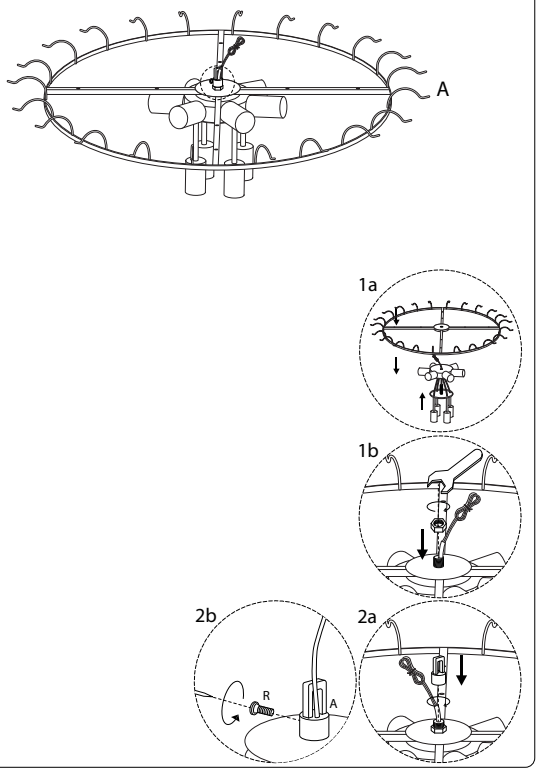

2613/AGUIRRE/250825/

3

B	K	N	O
x 1	x 4	x 4	x 4

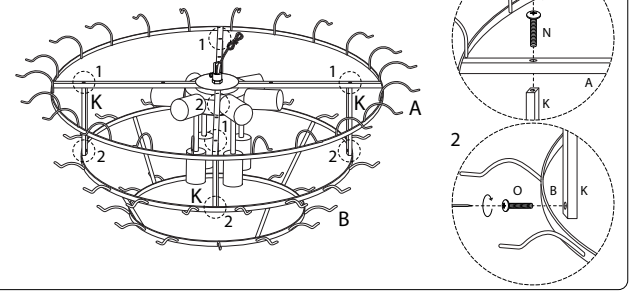

2613/AGUIRRE/250825/

5

I	J	R
x 1	x 1	x 1

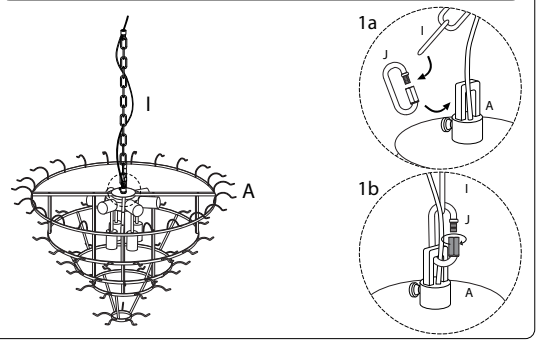

2613/AGUIRRE/250825/

4

C	L	N	O
x 1	x 4	x 4	x 4

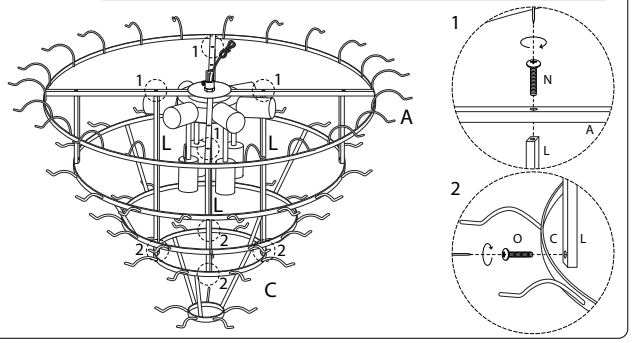

6

F	G	H	R	S
x 1	x 1	x 1	x 1	x 1

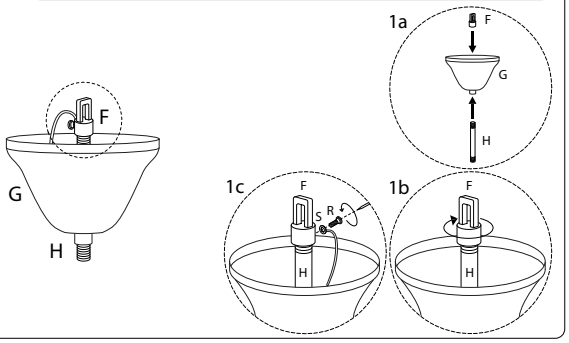

7

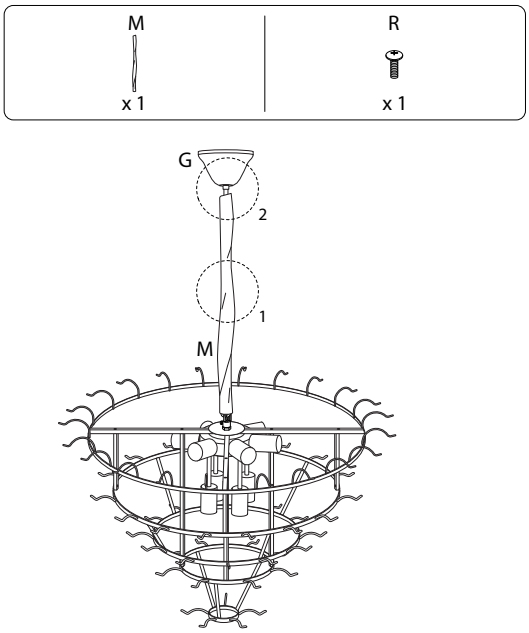

8/10

2613/AGUIRRE/250825/

8

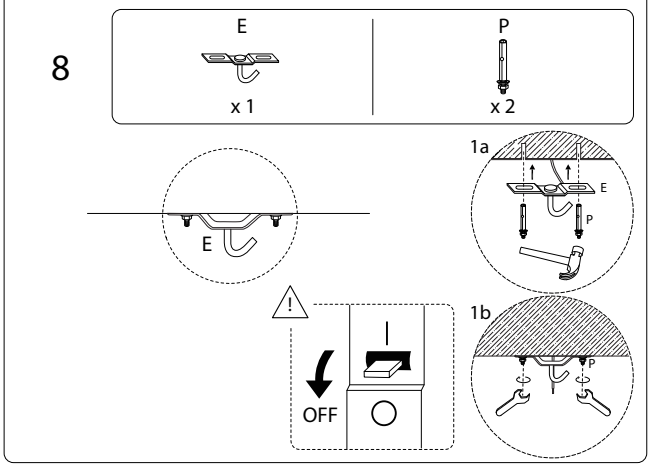

9

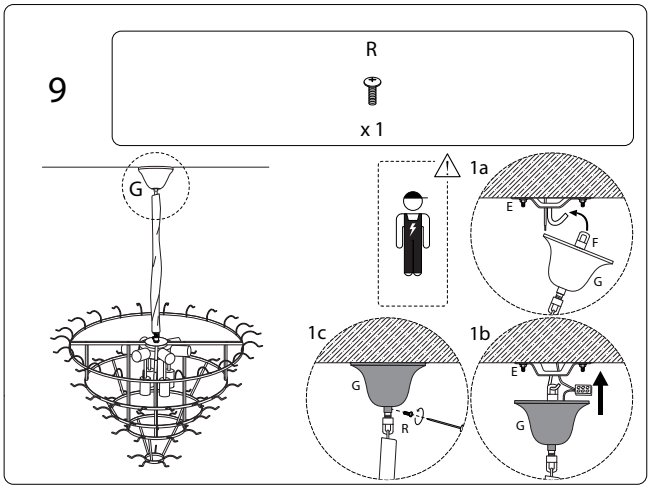

9/10

2613/AGUIRRE/250825/

10

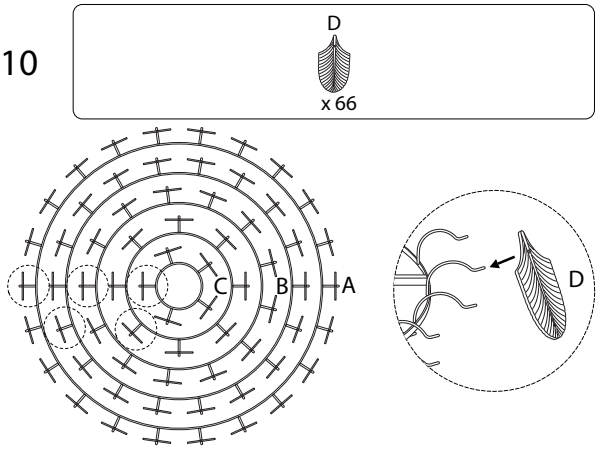

11

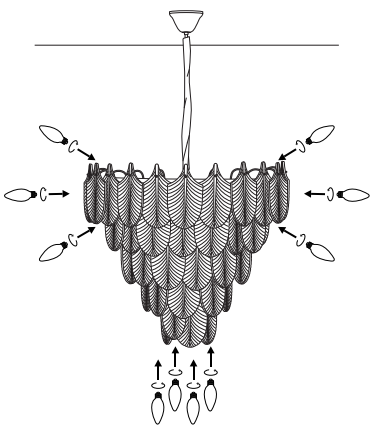

10/10