MAHAICA

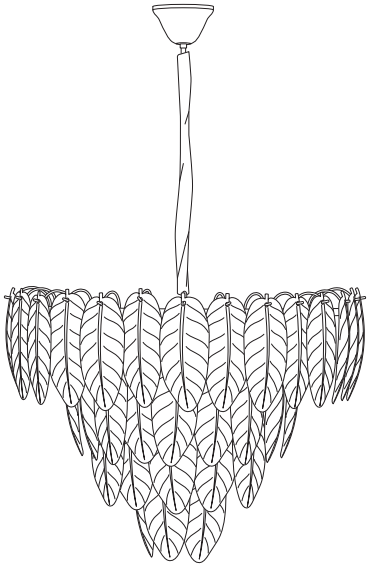

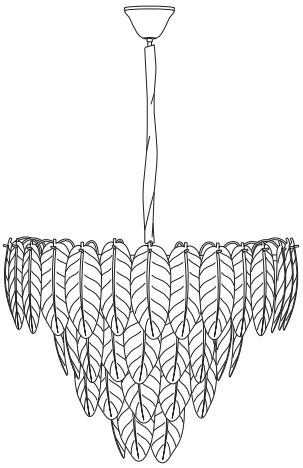

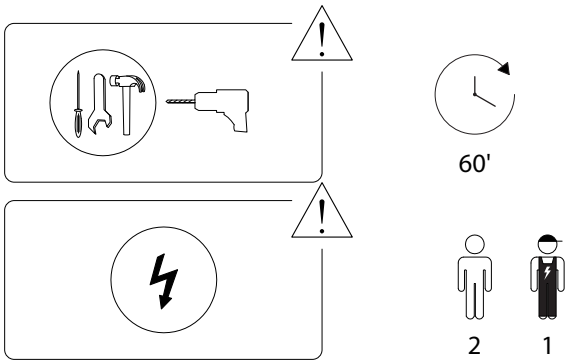

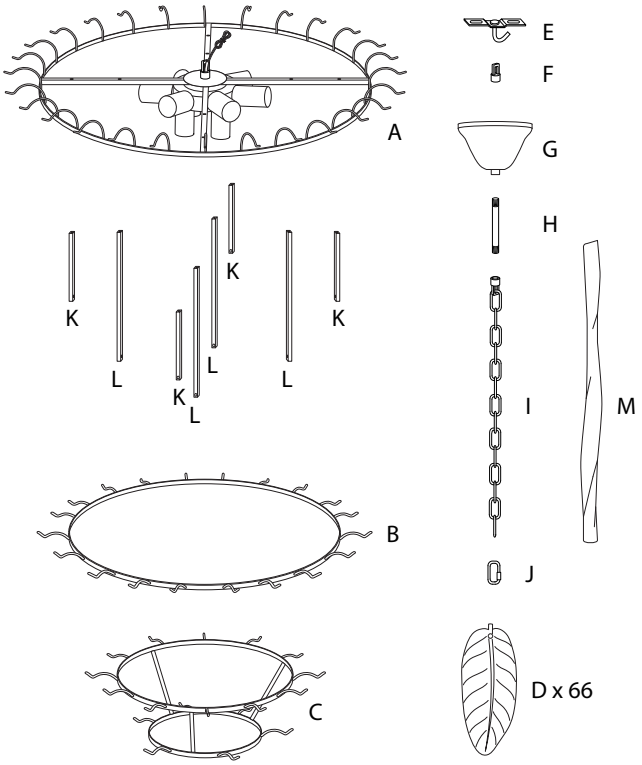

A	B	C
x 1	x 1	x 1
D	E	F
x 66	x 1	x 1

G	H	I	J
x 1	x 1	x 1	x 1
K	L	M	N
x 4	x 4	x 1	x 8
O	P	R	S
x 8	x 2	x 4	x 1

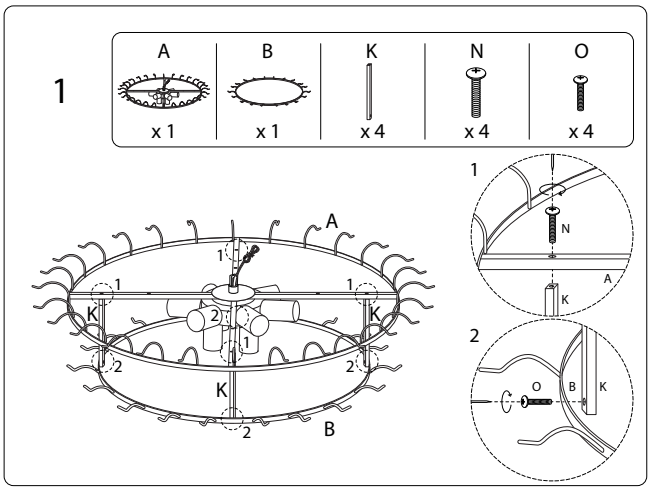
1
A
B
K
N
O
x 1
x 1
x 4
x 4
x 4
A
K
B
1
2
N
A
K
O
B
K

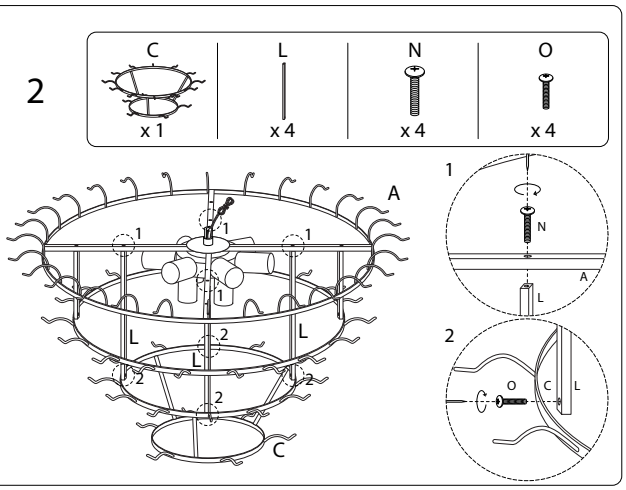
2
C
L
N
O
x 1
x 4
x 4
x 4
A
L
C
1
2
N
A
L
O
C
L

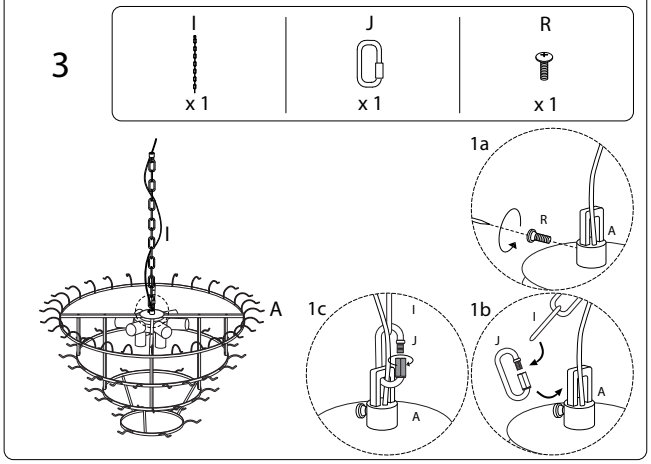
3
I
J
R
x 1
x 1
x 1
I
A
1a
R
A
1c
I
J
A
1b
I
J
A

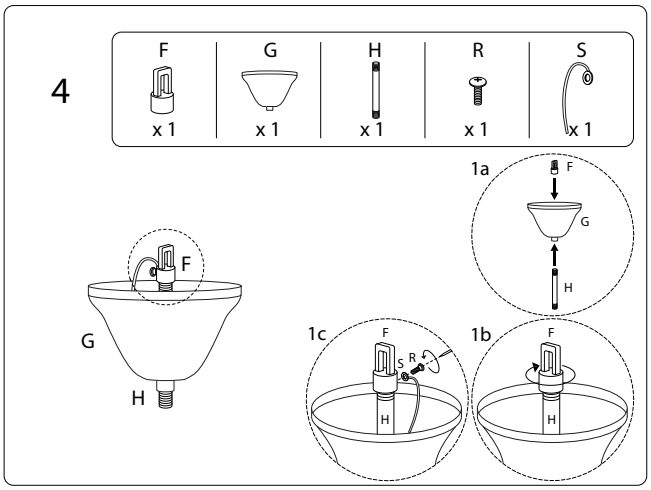
4
F
G
H
R
S
x 1
x 1
x 1
x 1
x 1
F
G
H
1a
F
G
H
1c
F
S
R
H
1b
F
H

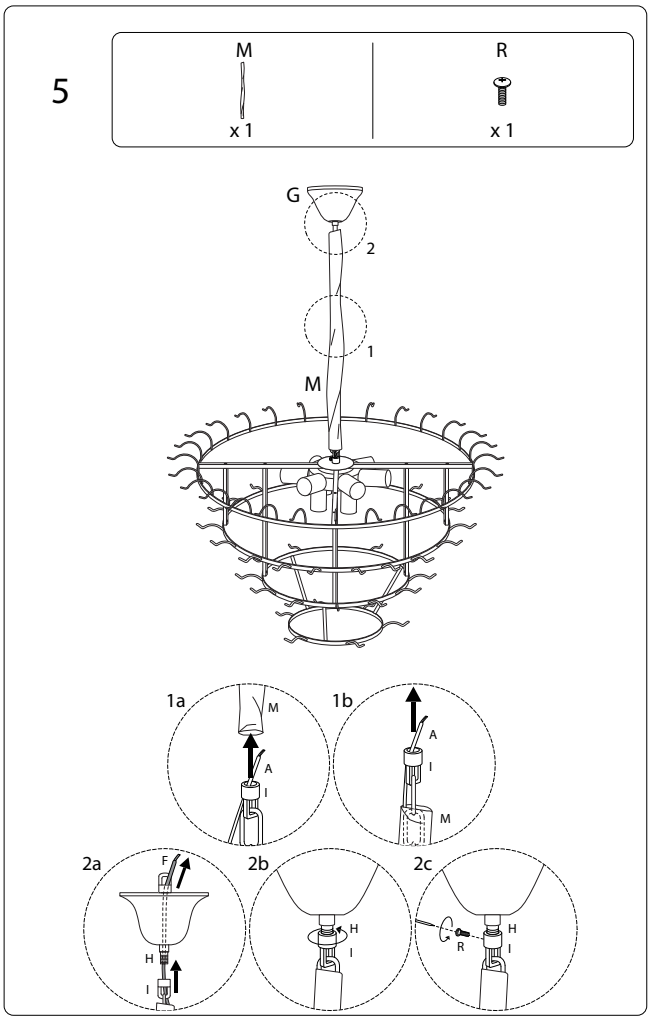
5
M
R
x 1
x 1
G
2
1
M
1a
M
A
I
1b
A
I
M
2a
F
H
I
2b
H
I
2c
R
H
I

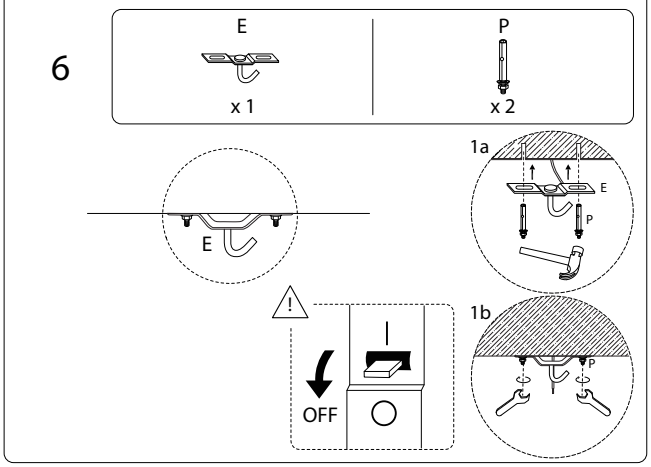
6
E
P
x 1
x 2
E
1a
E
P
1b
P
OFF

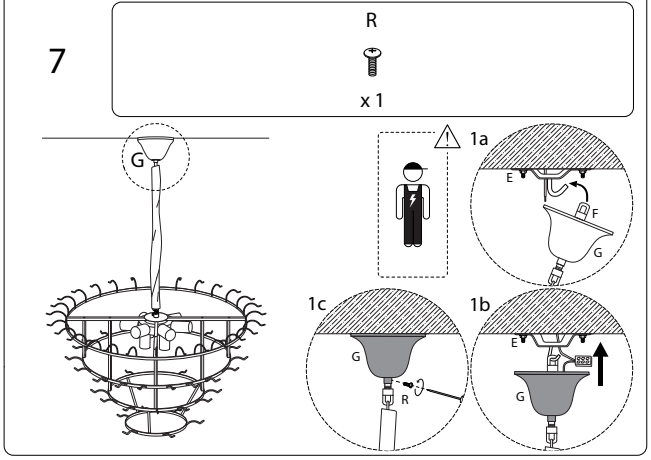
7
R
x 1
G
1a
E
F
G
1c
G
R
1b
E
G

8

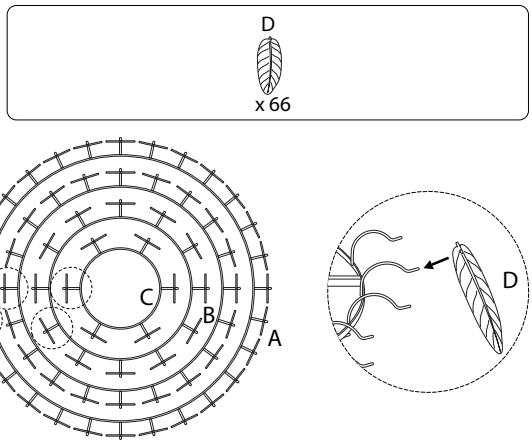

7

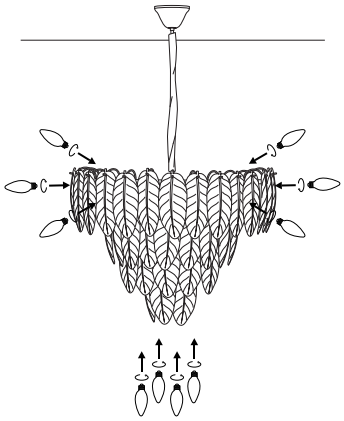

2613/MAHAICA/230725/