FORBES

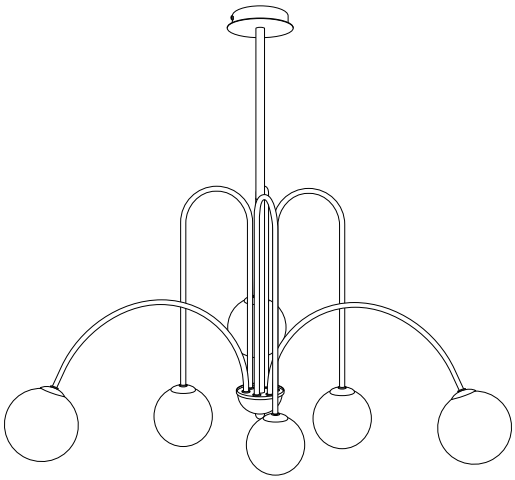

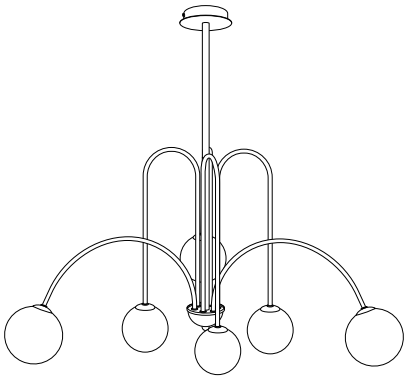

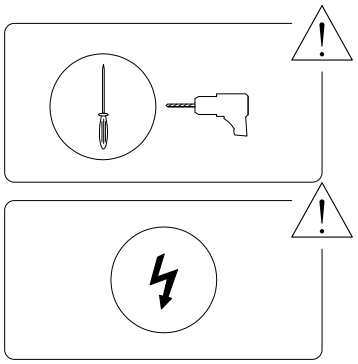

15'

1

1/5

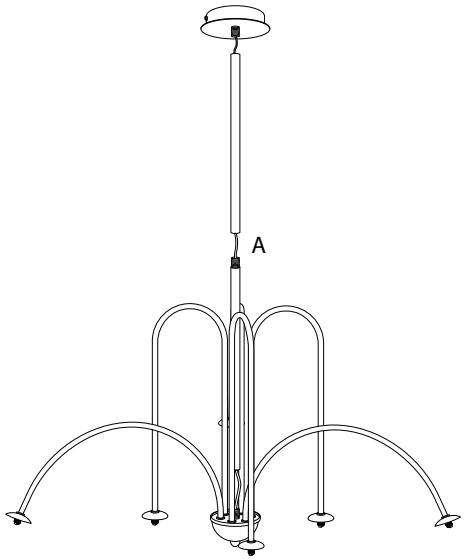

A	B	C	D	E
x 1	x 3	x 3	x 2	x 2

2/5

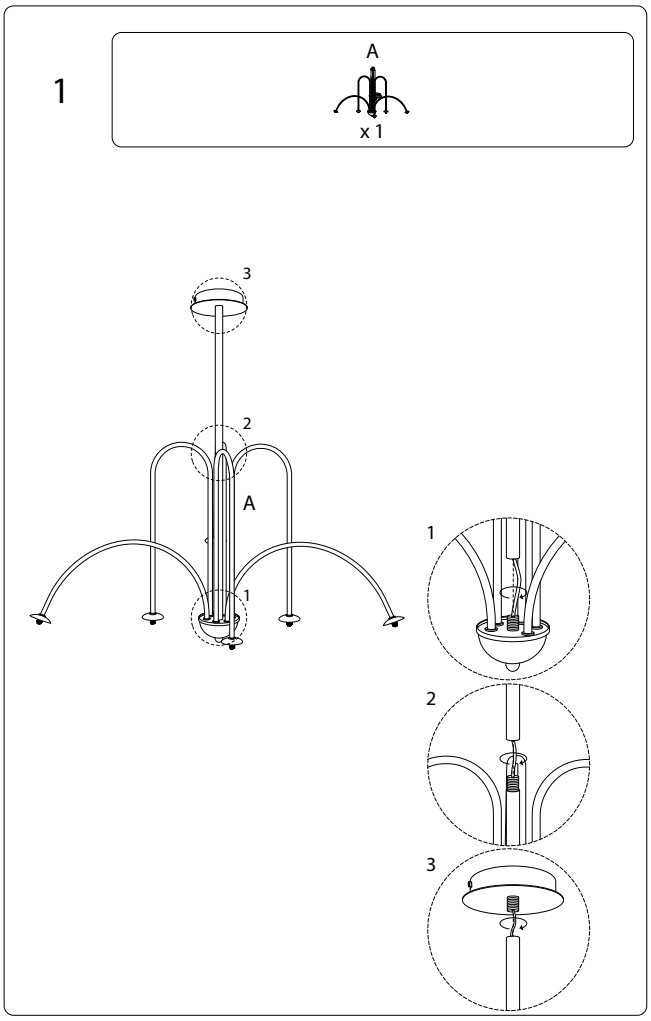

3/5

2

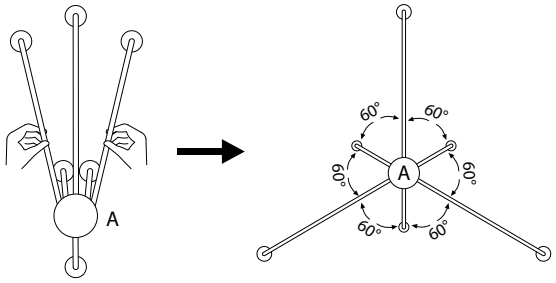

3

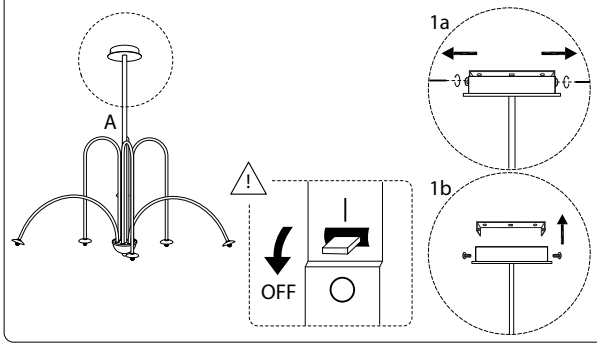

2025/FORBES/090224/

4

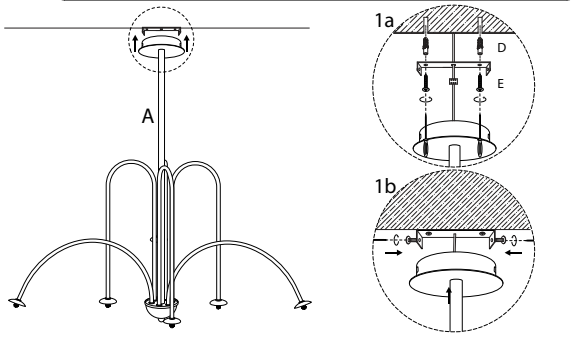

5

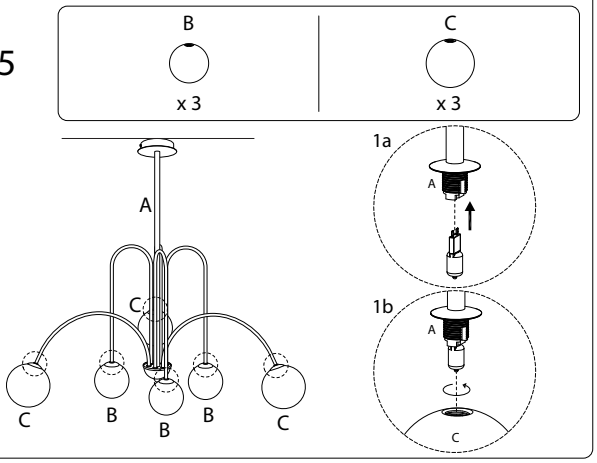

2025/FORBES/090224/