CAROY

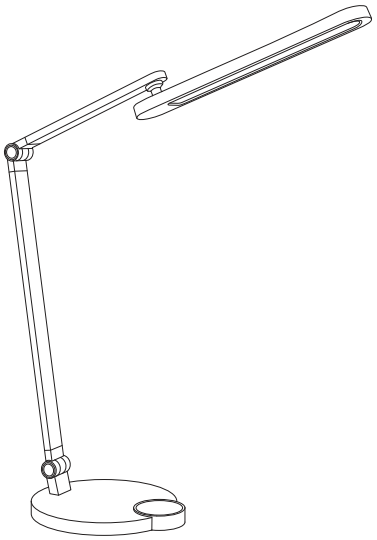

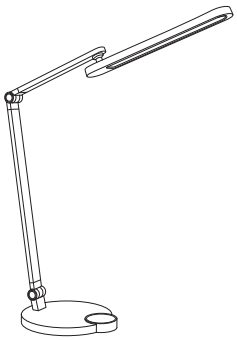

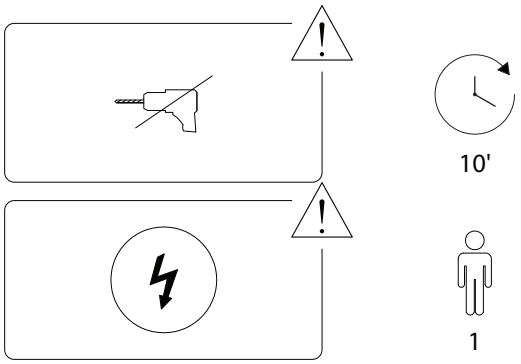

1/6

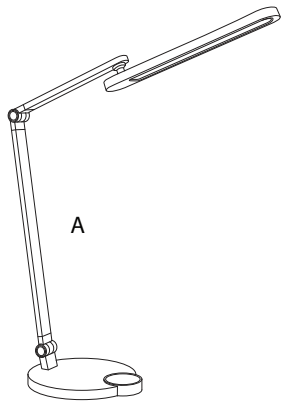

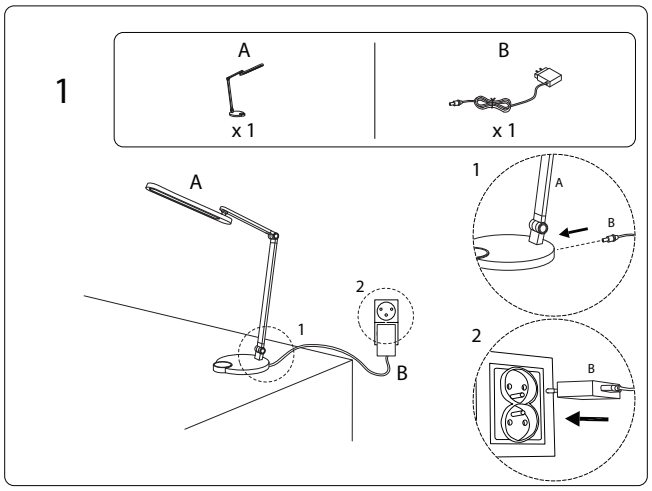

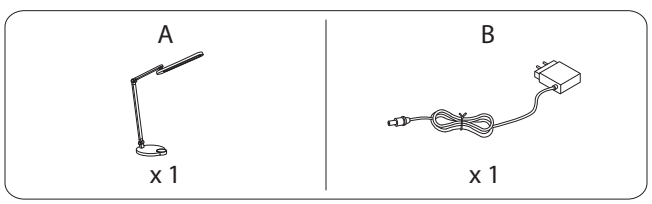

2/6

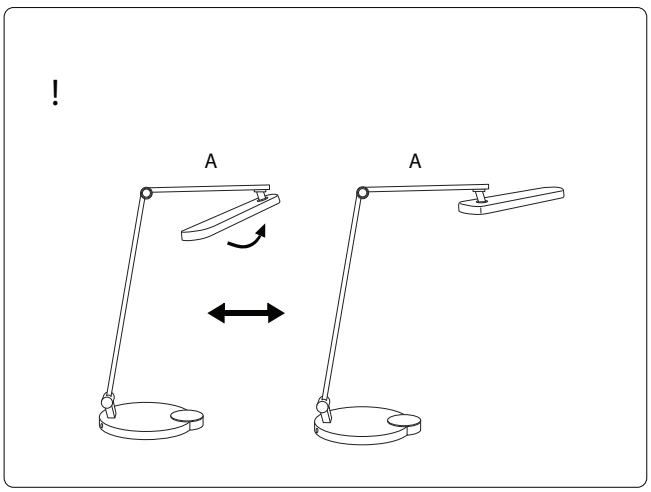

3/6

!

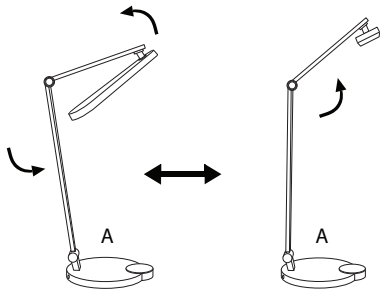
A
A