

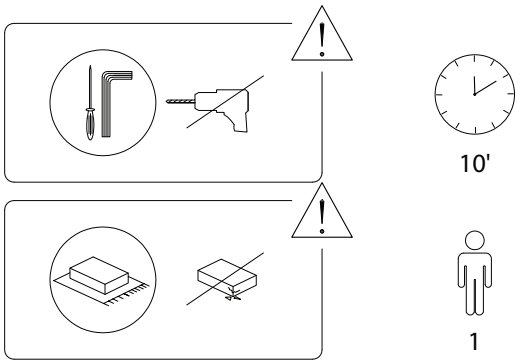

10'

1

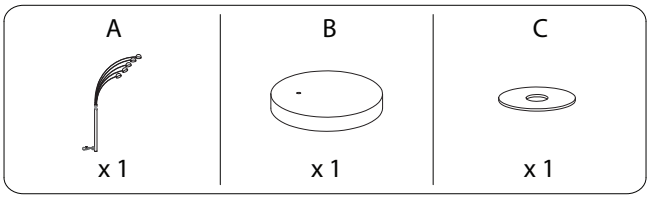
A
x 1
B
x 1
C
x 1

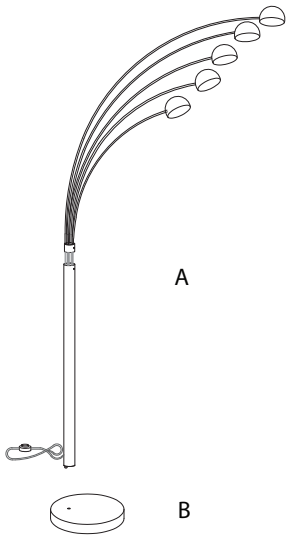
A
B

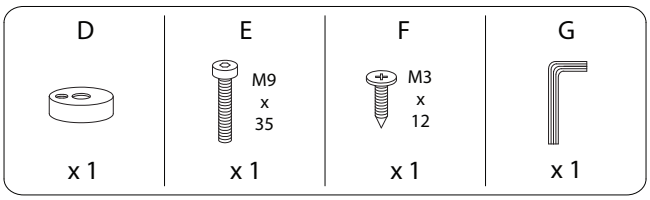
D
x 1
E
M9
x
35
x 1
F
M3
x
12
x 1
G
x 1

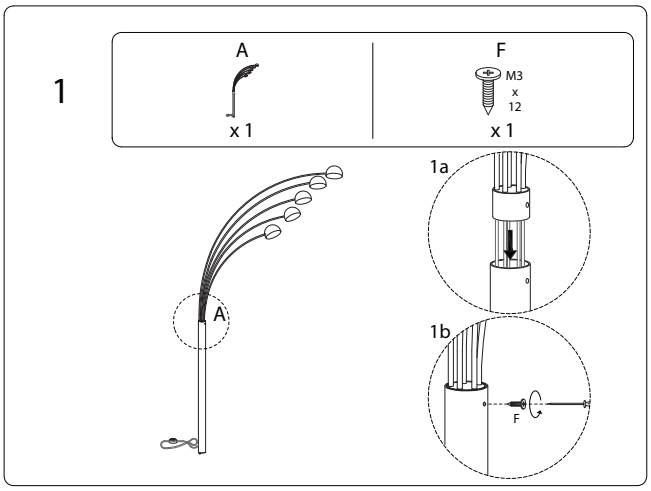
1
A
x 1
F
M3
x
12
x 1
A
1a
1b
F

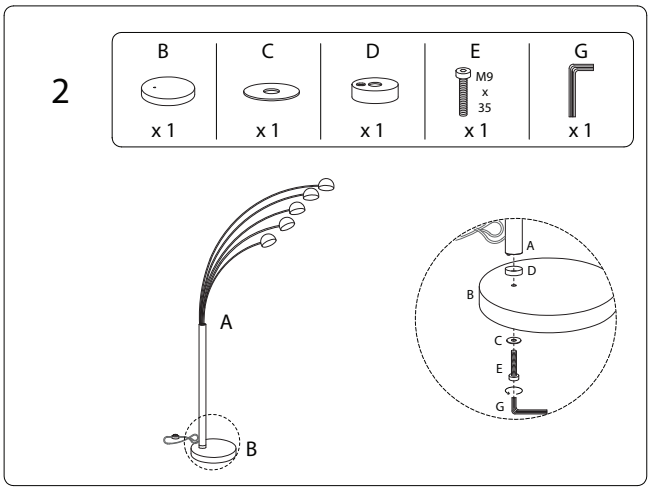
2
B
x 1
C
x 1
D
x 1
E
M9
x
35
x 1
G
x 1
A
B
A
D
B
C
E
G

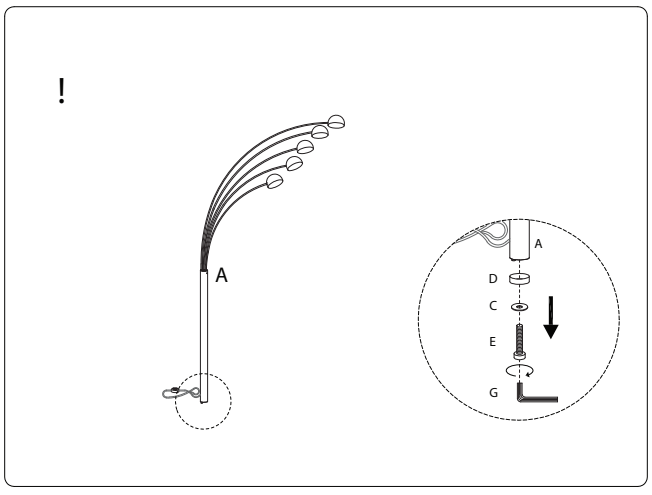
!
A
A
D
C
E
G