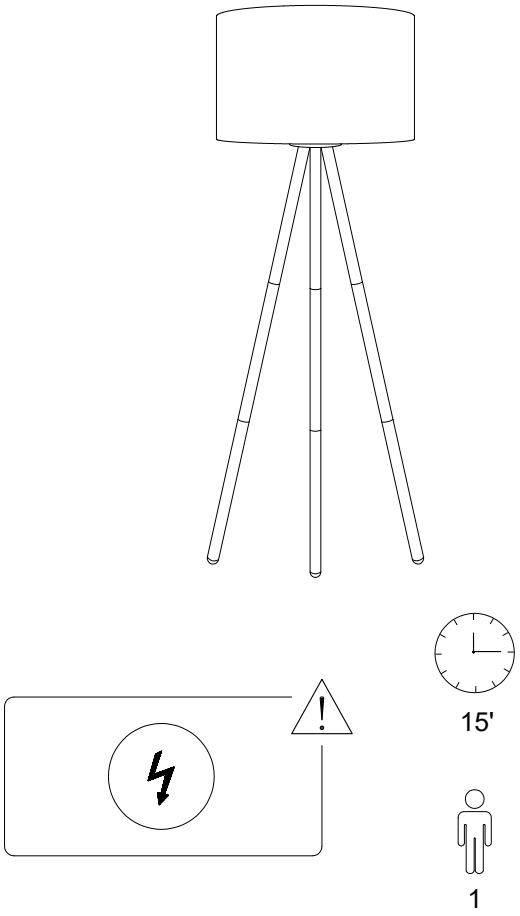

1/4

552/VISTULA/220319/

A	B	C	D	E	F
x 1	x 1	x 1	x 3	x 3	x 3

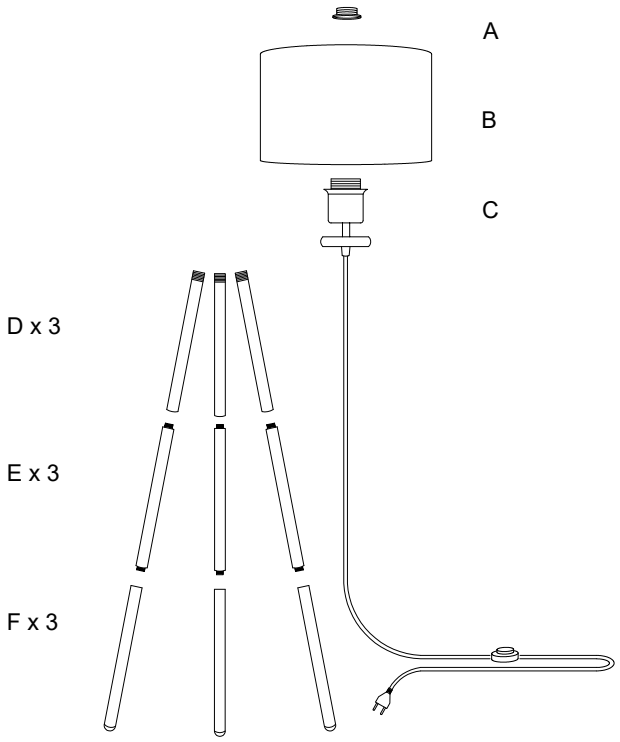

2/4

552/VISTULA/220319/

1

D	E	F
x 3	x 3	x 3

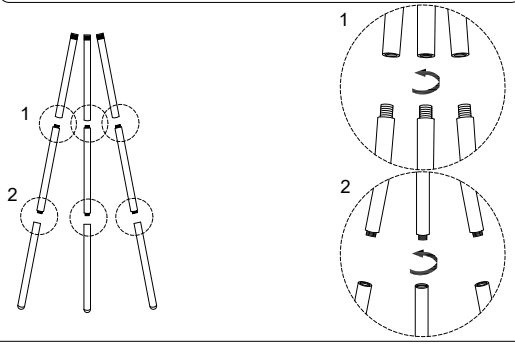

3

A	B
x 1	x 1

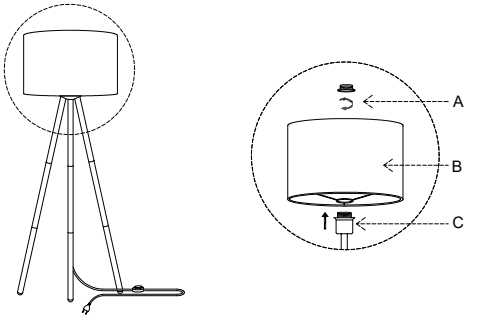

2

C
x 1

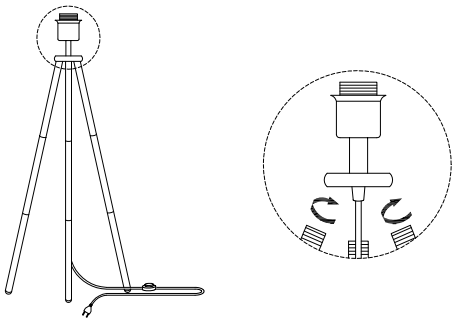

3/4

552/VISTULA/220319/

4

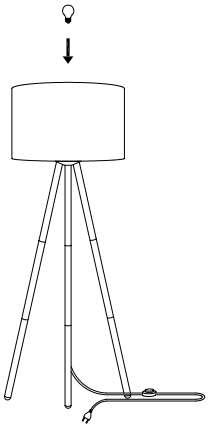

4/4

552/VISTULA/220319/