BATALI

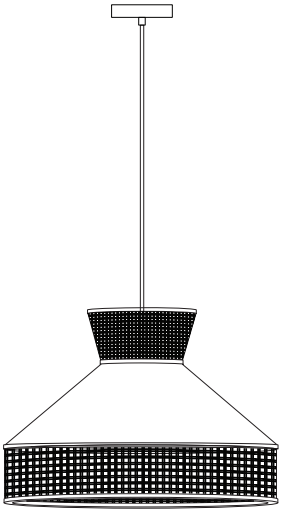

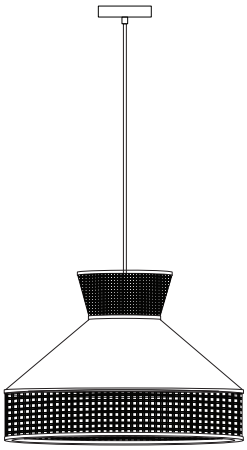

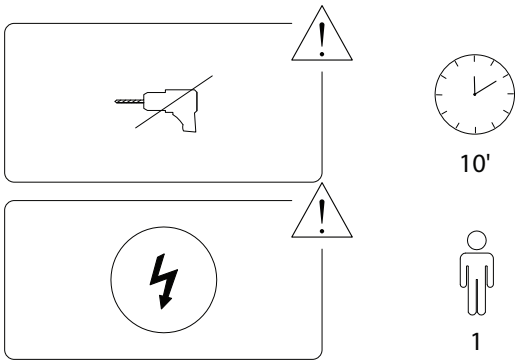

1/6

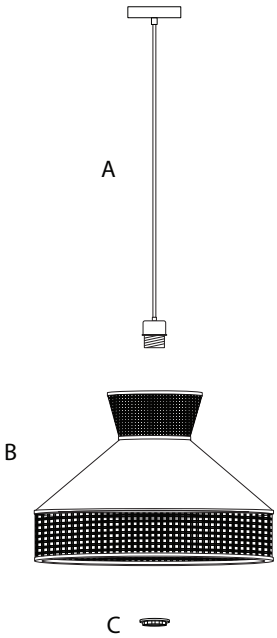

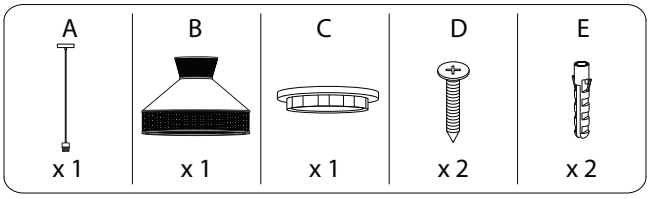

2/6

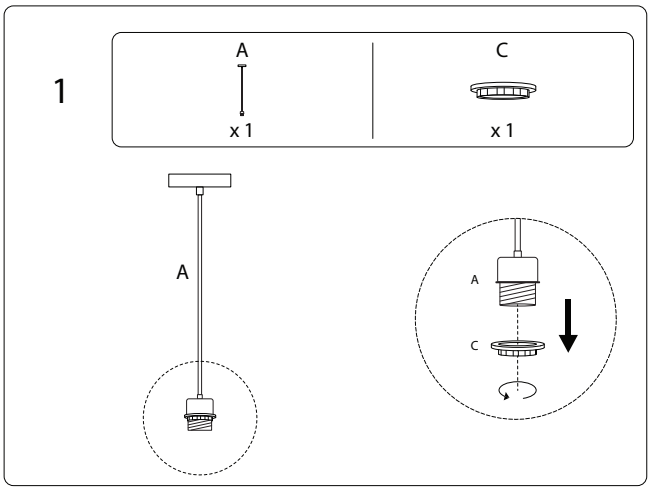

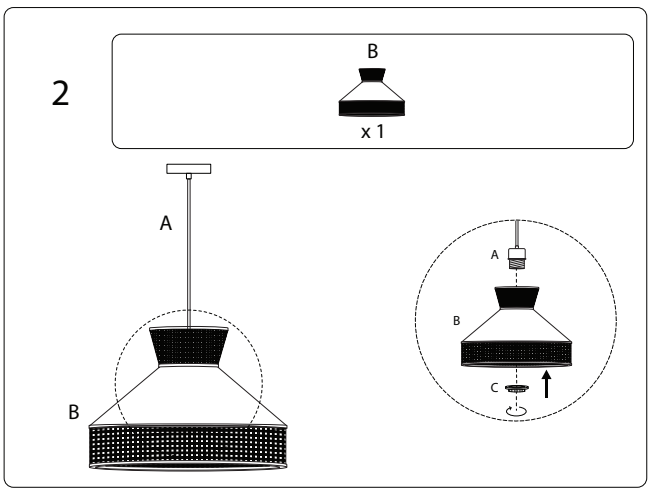

3/6

3

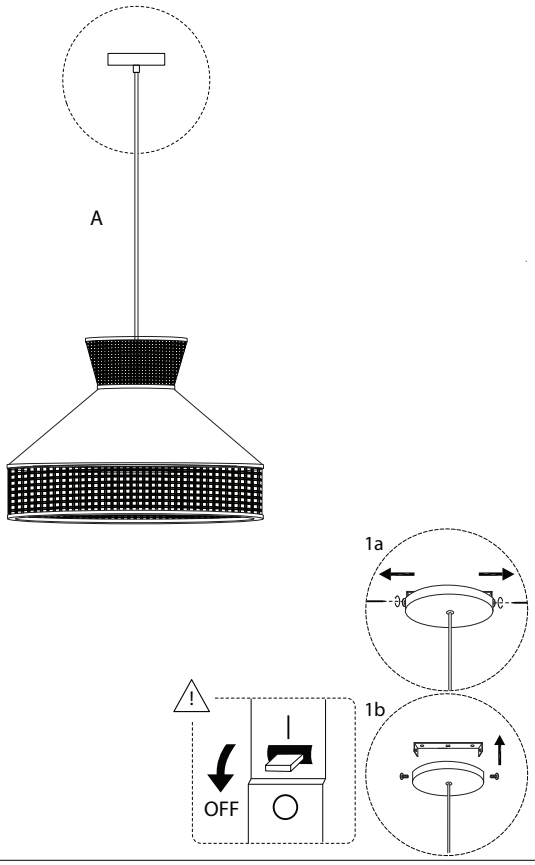

4/6

488/BATALI/221222/

4

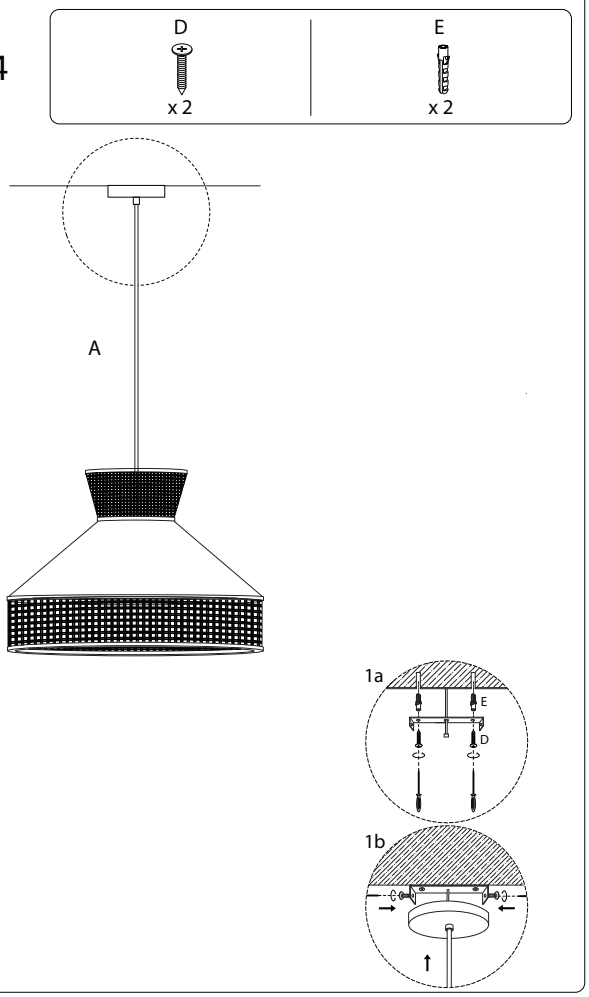

5/6

488/BATALI/221222/

5

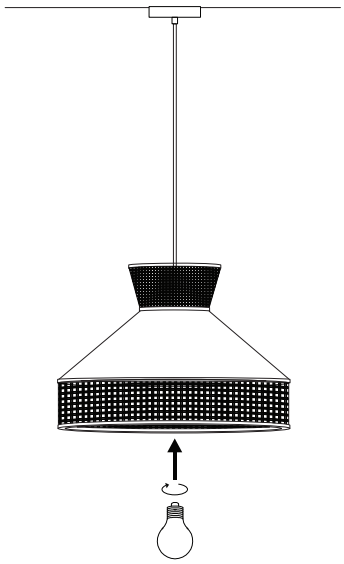

6/6

488/BATALI/221222/