

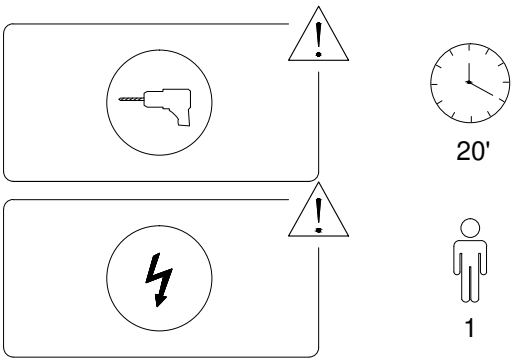

1/4

A	B	C
x 1	x 1	x 1

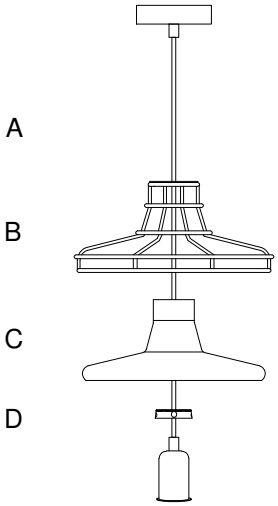

D	E	F
x 1	x 2	x 2

2/4

1

A	E	F
x 1	x 2	x 2

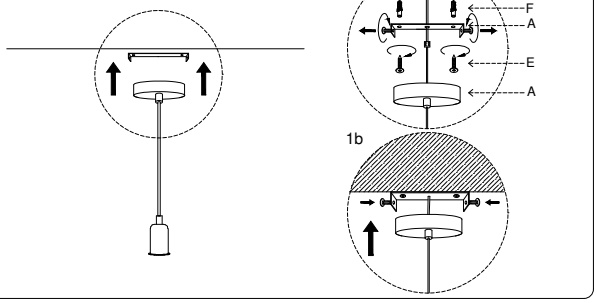

2

B	C
x 1	x 1

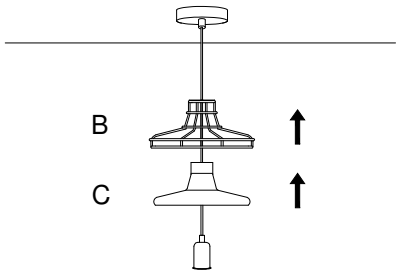

3/4

3

D
x 1

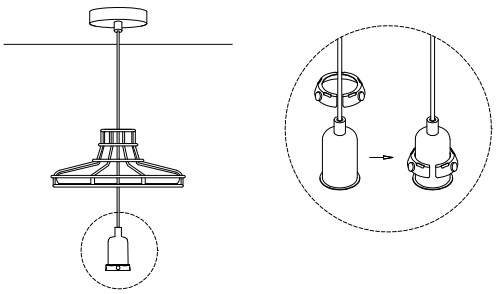

4

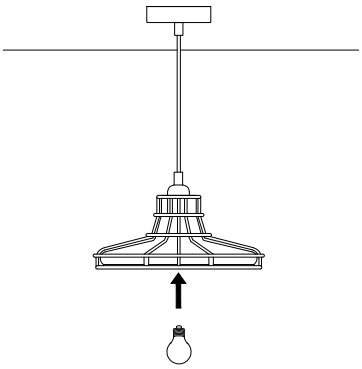

4/4