KARLA

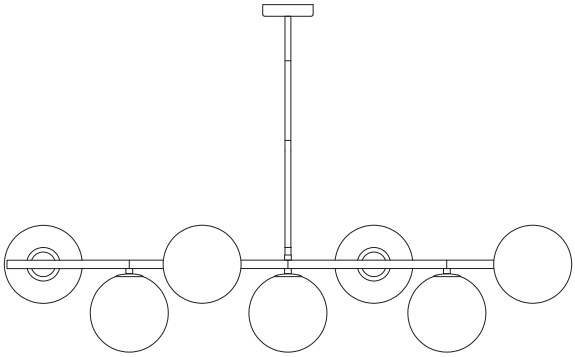

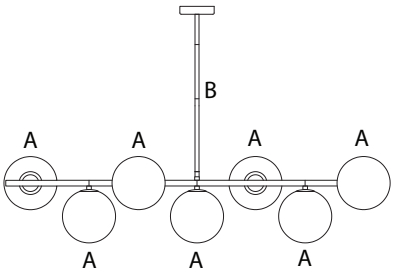
B
A
A
A
A
A
A
A

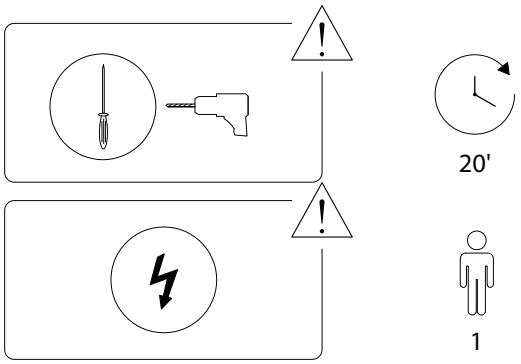
20'
1

A

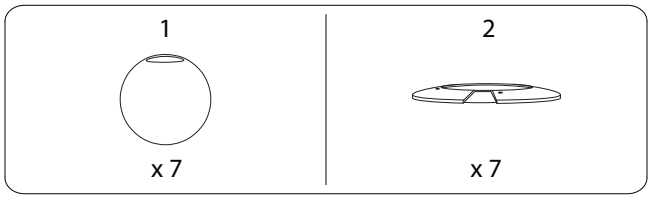
1
x 7
2
x 7

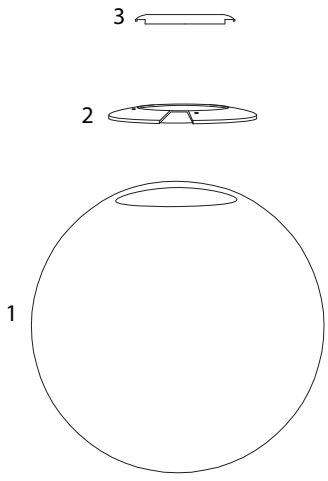
3
2
1

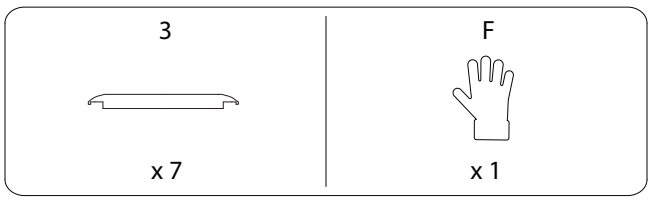
3
x 7
F
x 1

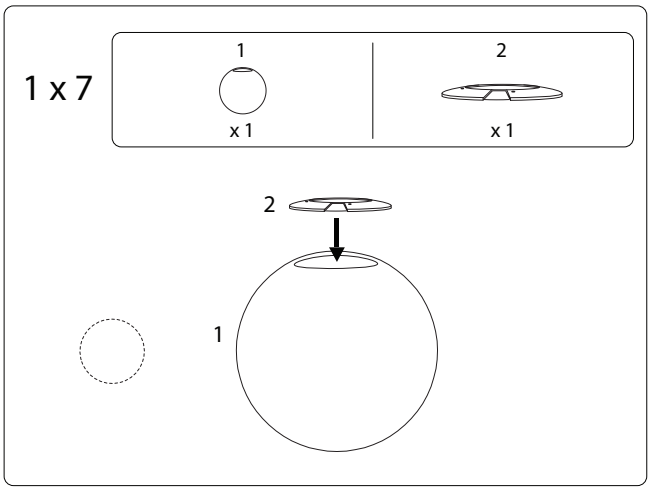
1 x 7
1
x 1
2
x 1
2
1

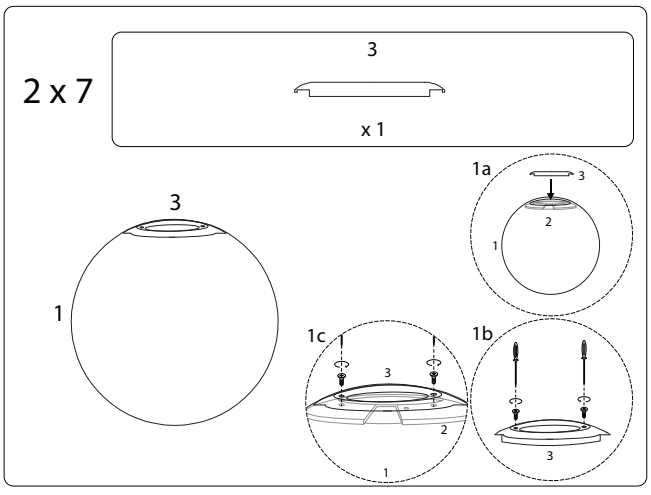
2 x 7
3
x 1
3
1
1a
3
2
1
1c
3
2
1
1b
3

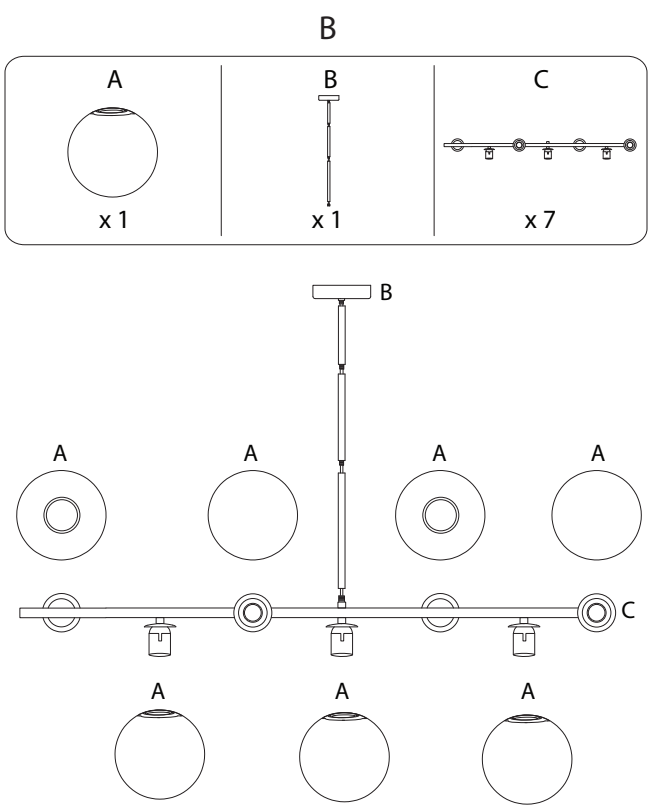
B
A
x 1
B
x 1
C
x 7
B
A
A
A
A
C
A
A
A
D
x 2
E
x 2
F
x 1

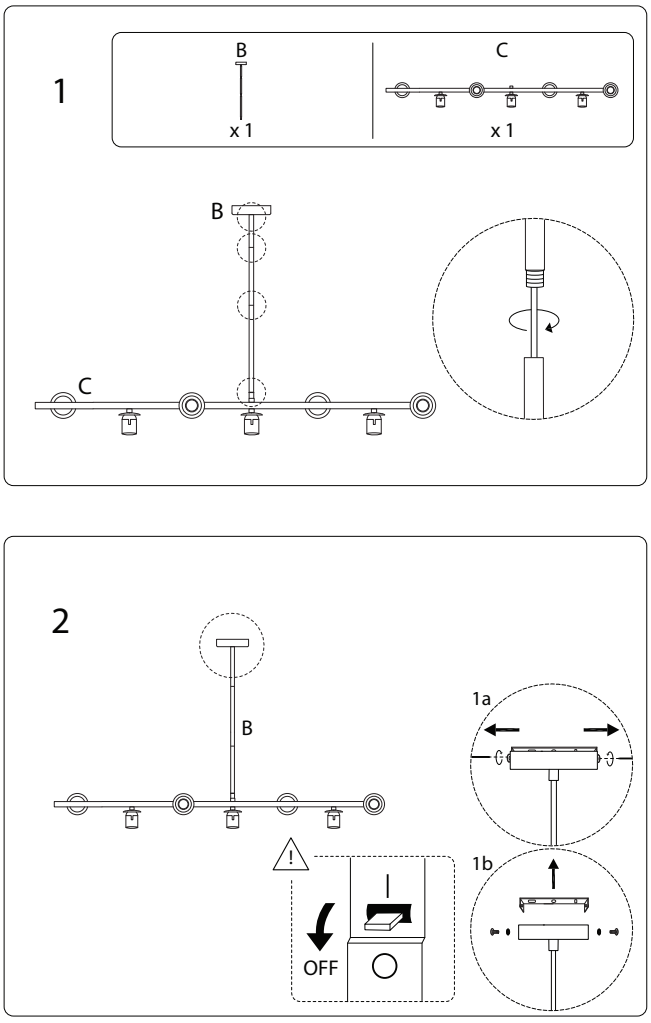
1
B
x 1
C
x 1
B
C
2
B
1a
1b
OFF

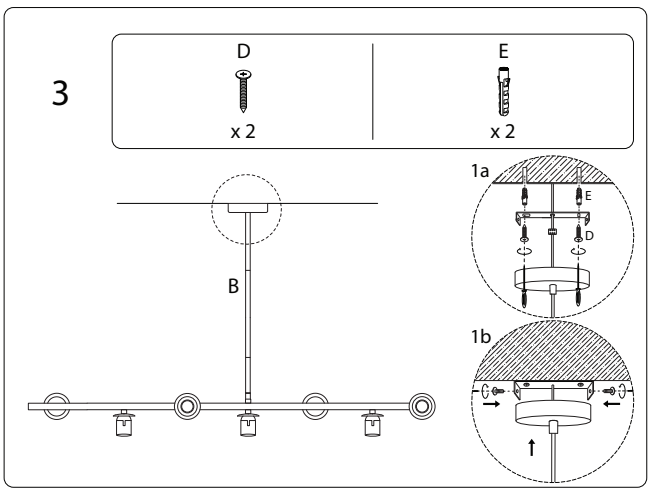
3
D
x 2
E
x 2
B
1a
E
D
1b

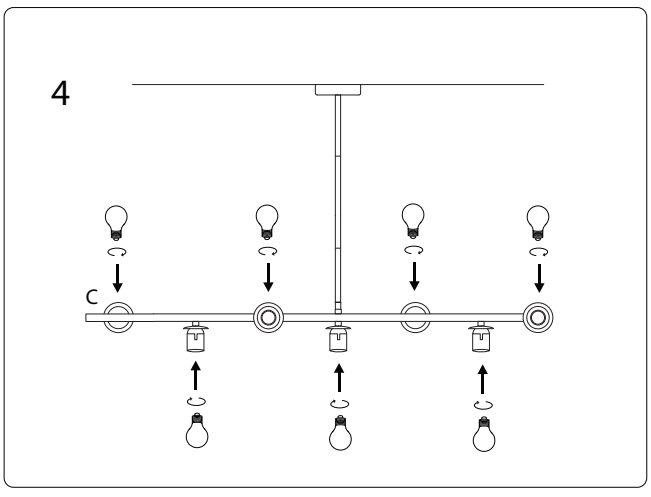
4
C

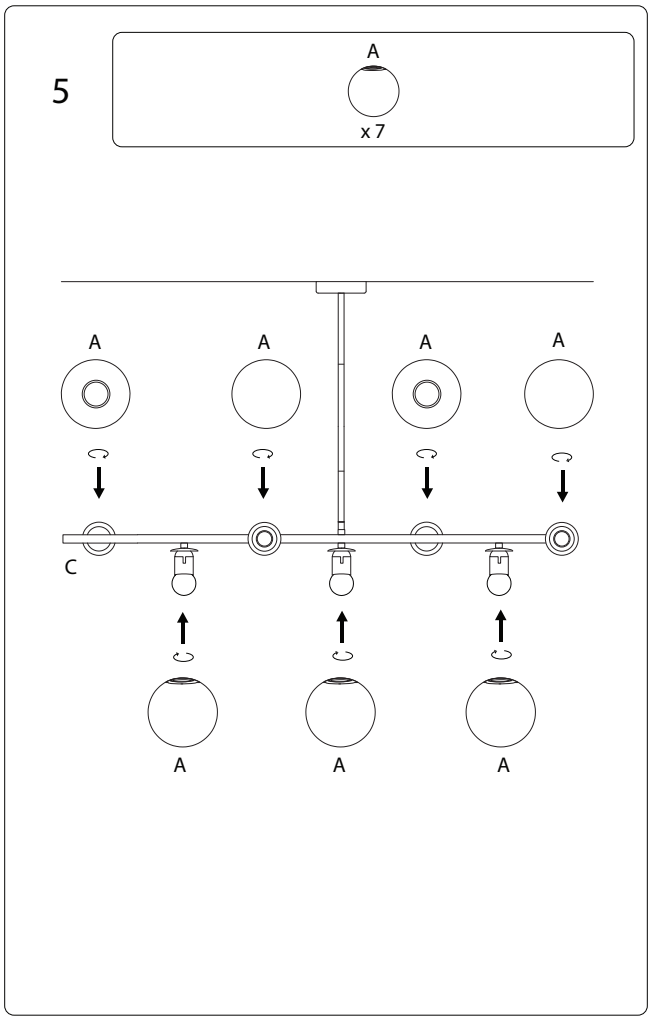
5
A
x 7
A
A
A
A
C
A
A
A