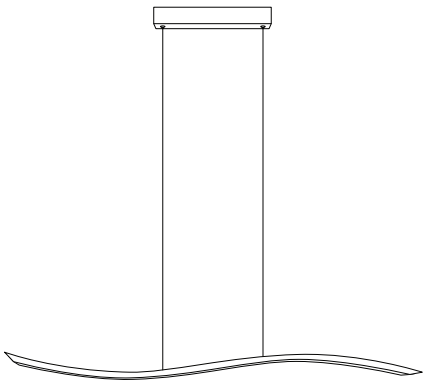

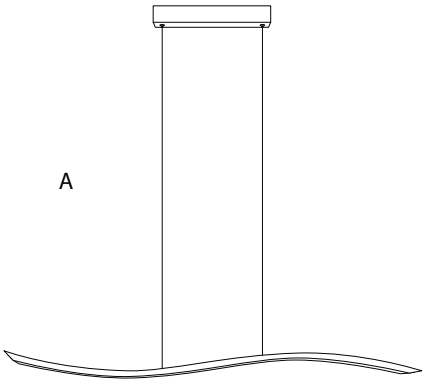

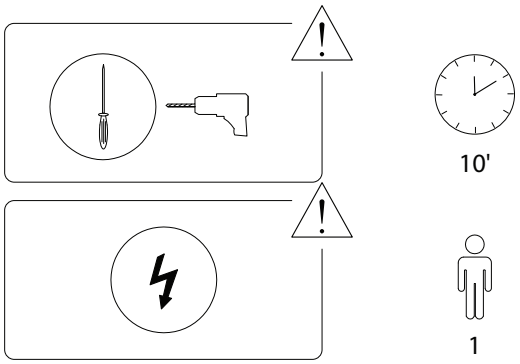

1/5

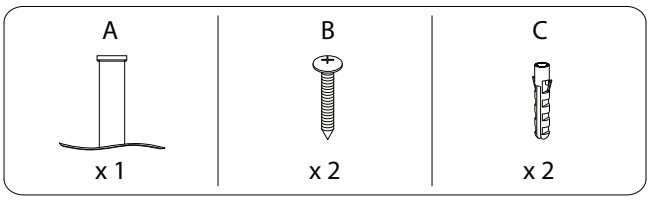

2/5

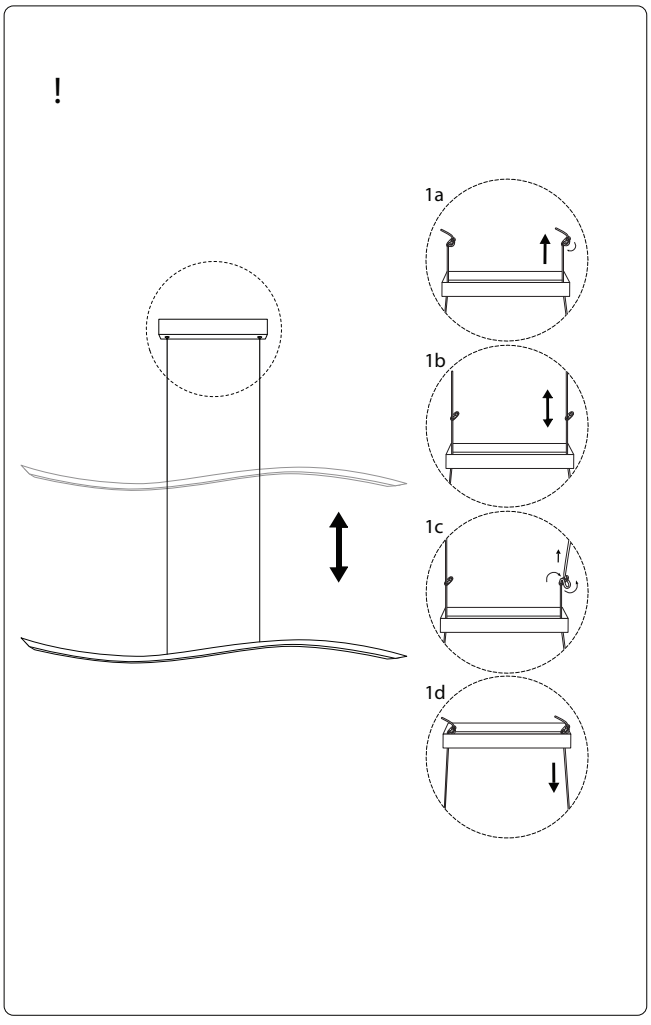

3/5

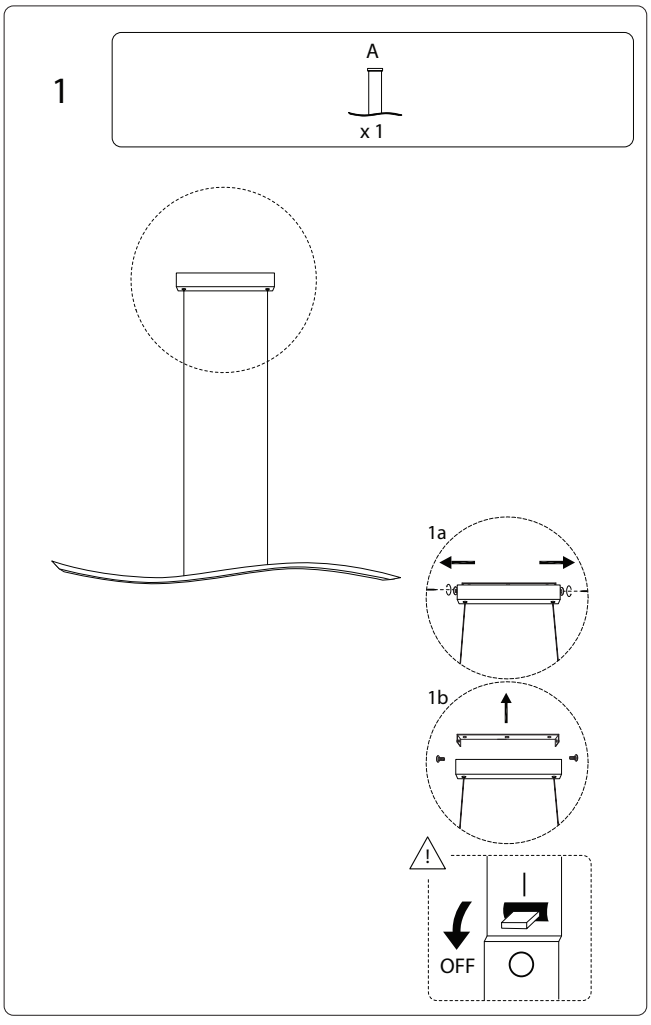

4/5

2

B	C
	
x 2	x 2

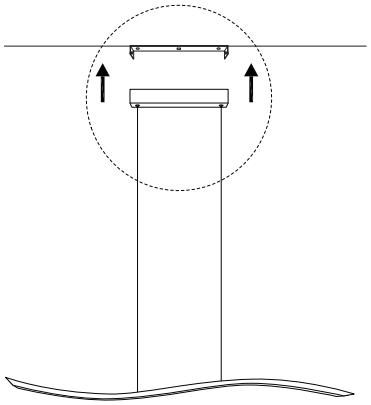

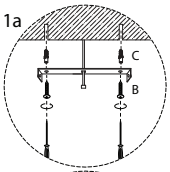

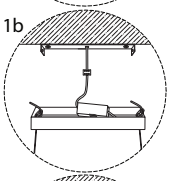

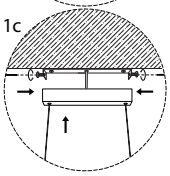

1759/CALAO I/090622/