TELAMBA



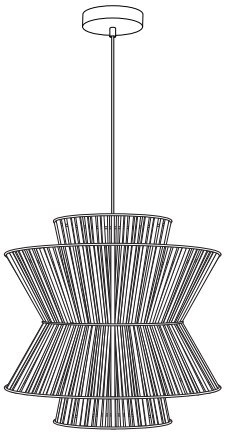

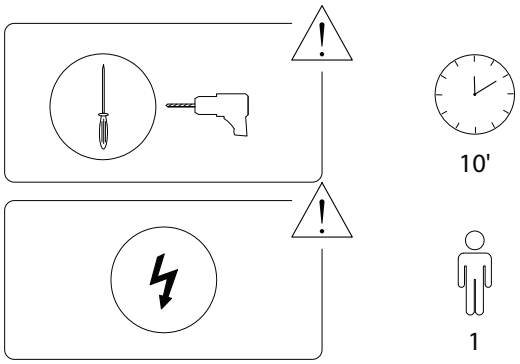

1/5

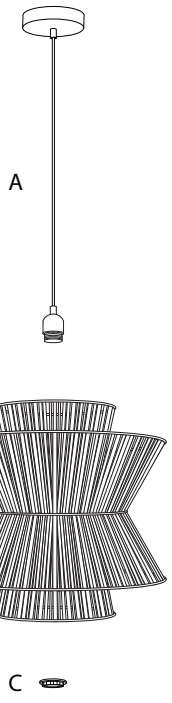

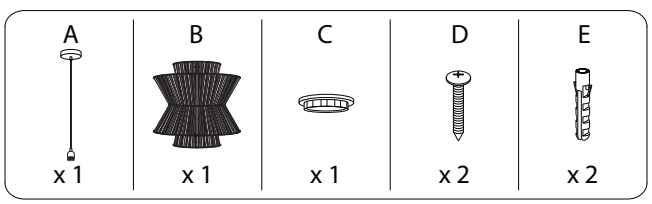

2/5

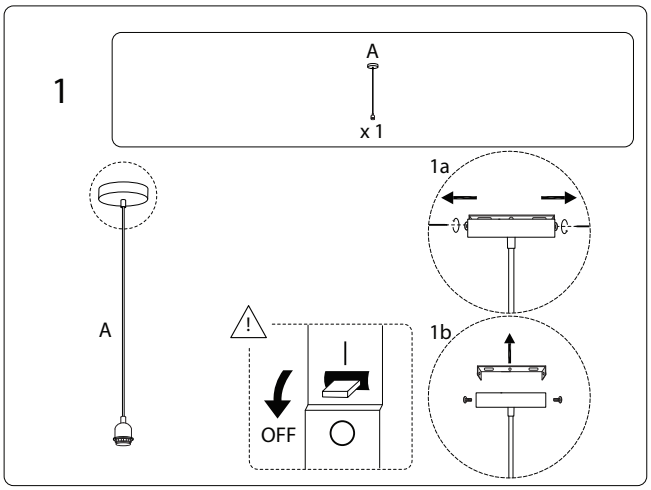

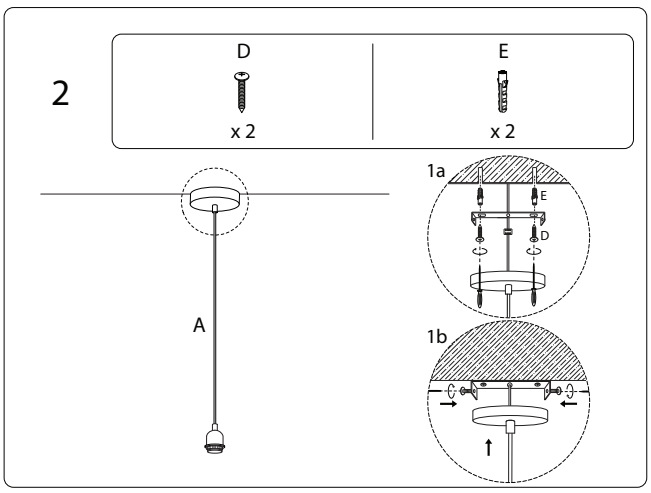

3/5

3

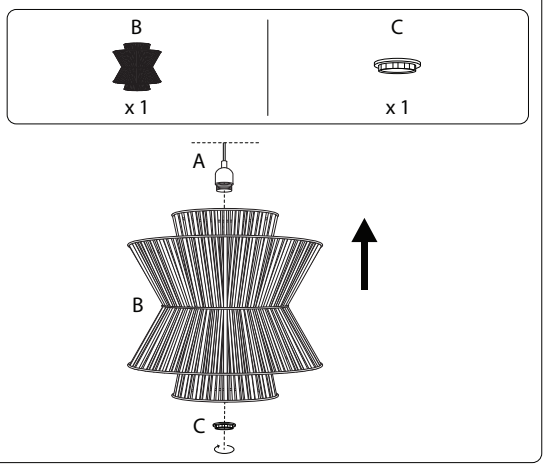

4



2113/TELAMBA/040424/

!

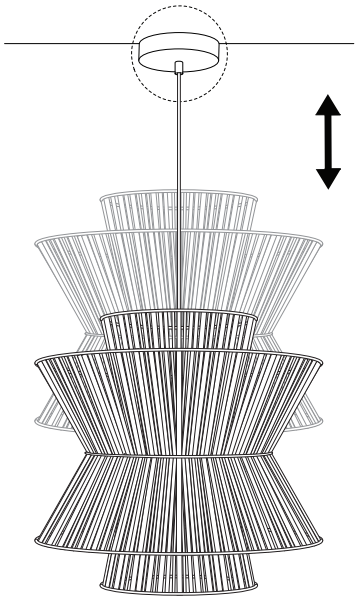

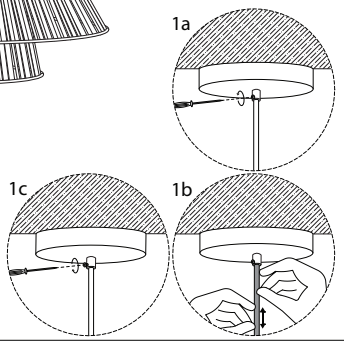

2113/TELAMBA/040424/