LUENHA

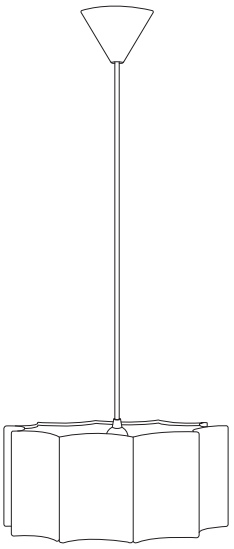

1/6

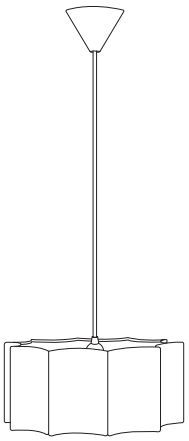

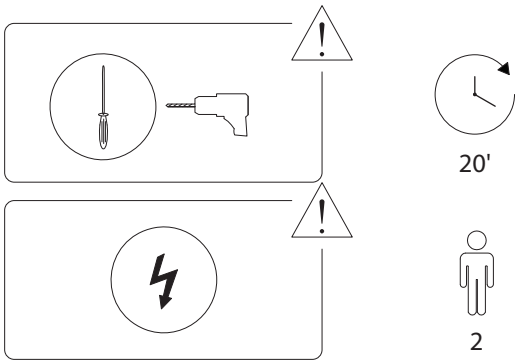

2/6

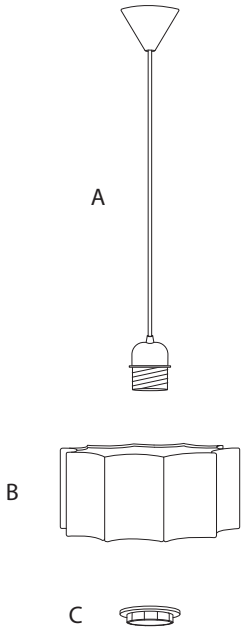

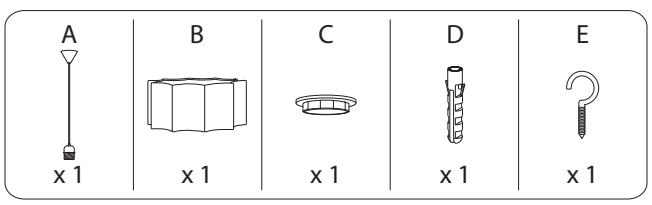

3/6

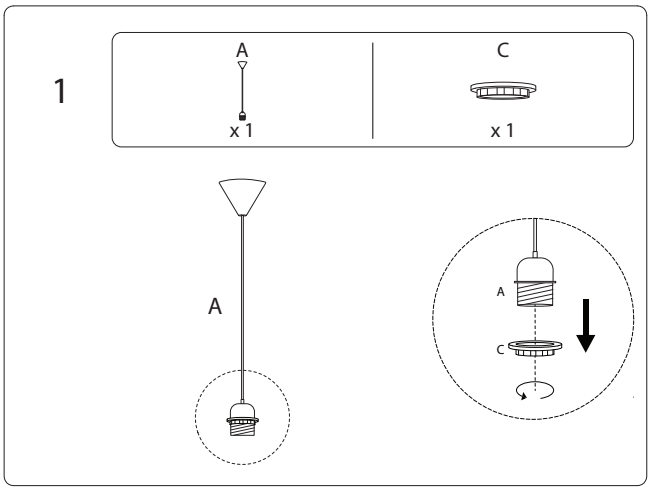

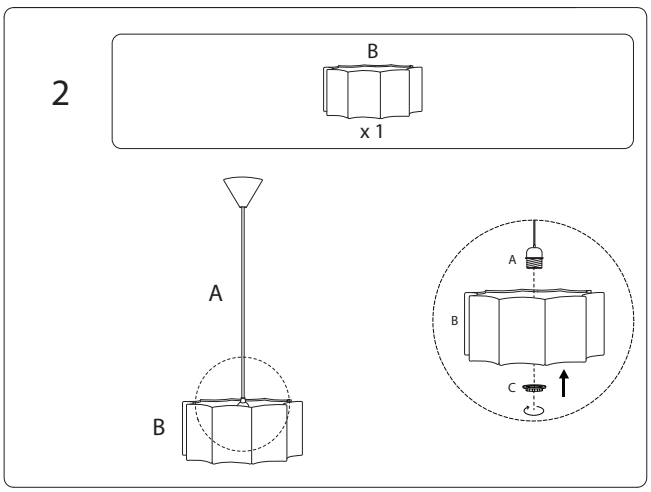

4/6

!

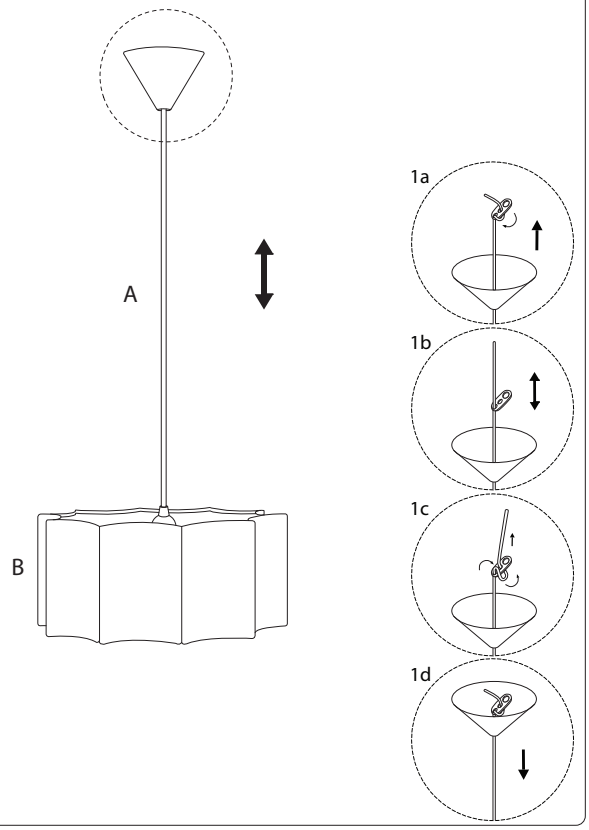

488/LUENHA/221225

3

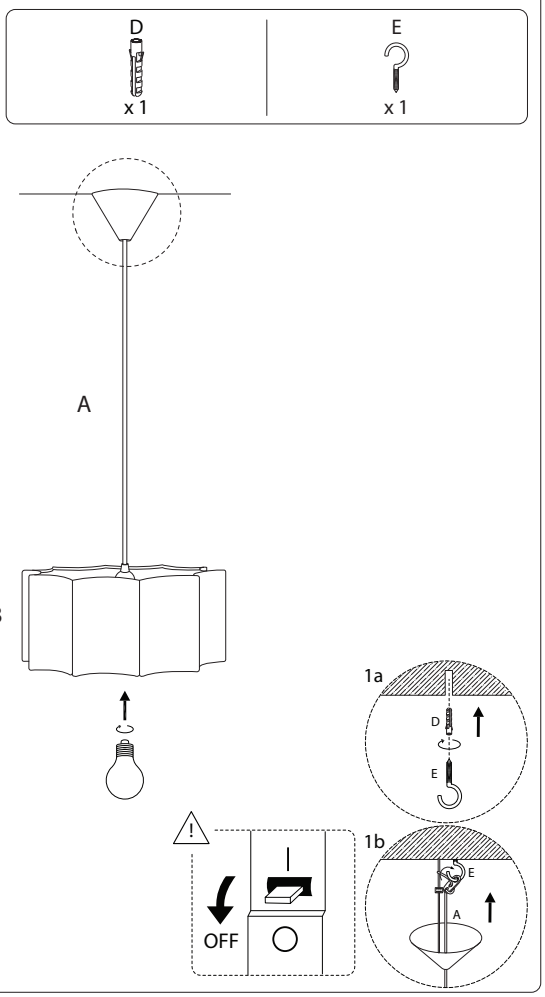

488/LUENHA/221225