ARENAS

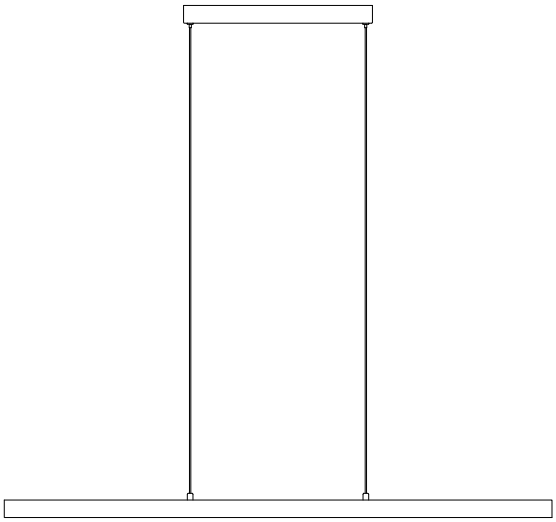

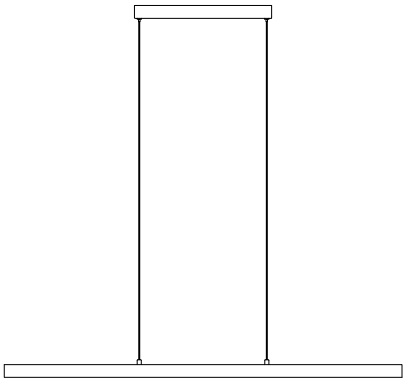

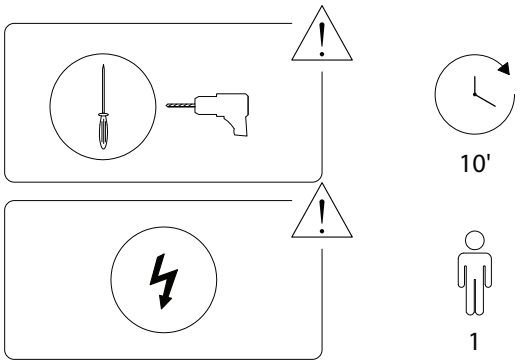

1/4

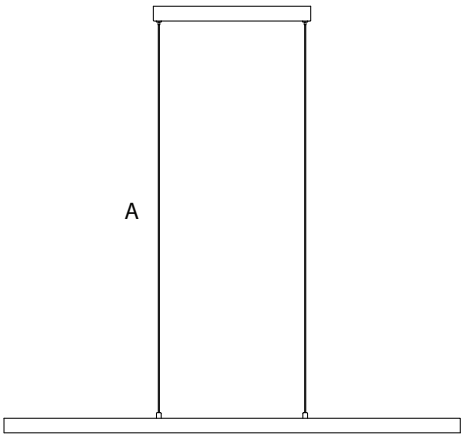

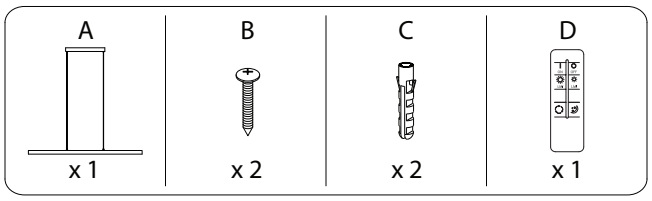

2/4

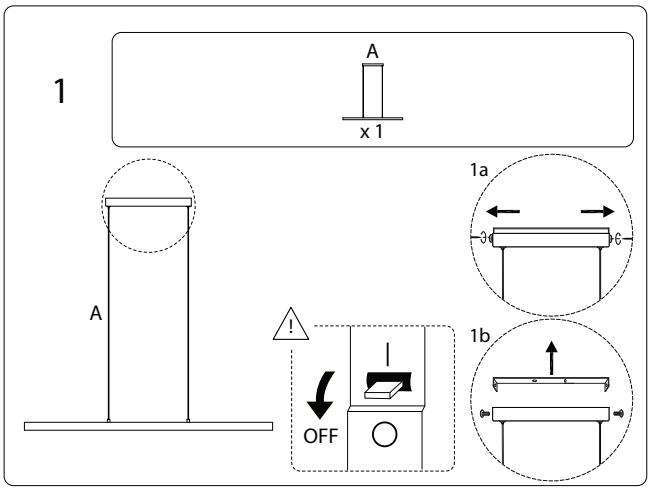

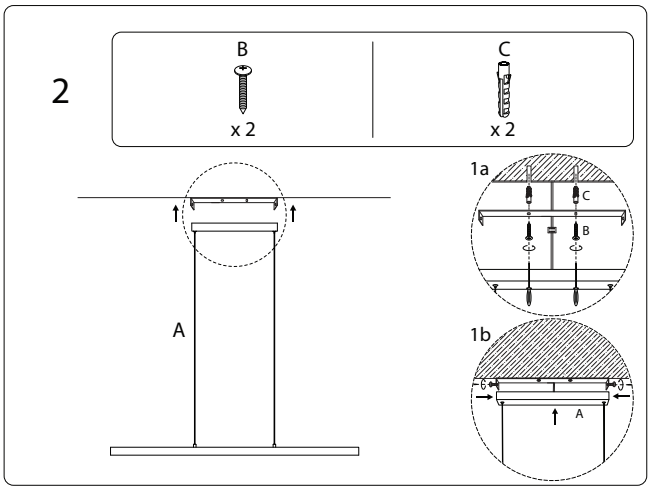

3/4

!

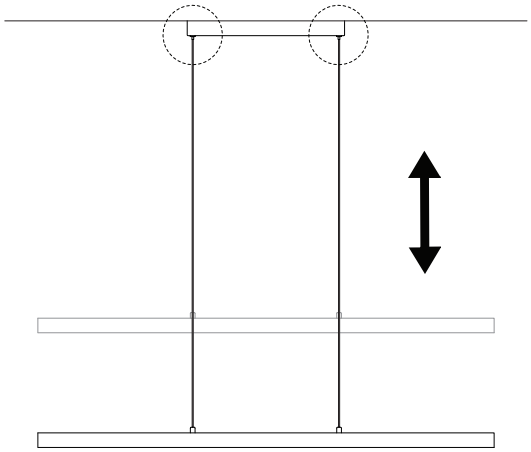

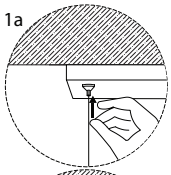

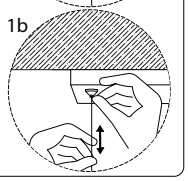

2025/ARENAS/240225/