BIRIM

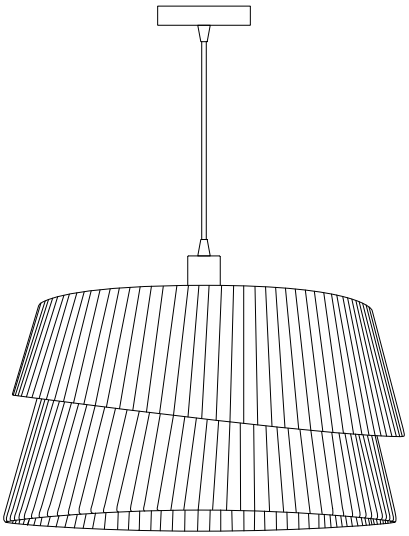

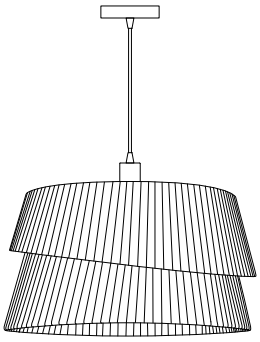

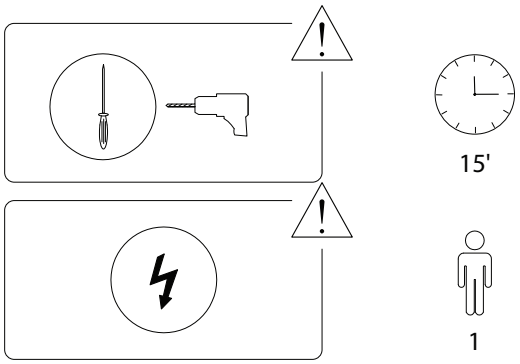

1/4

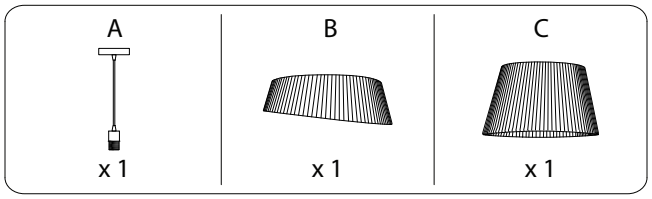

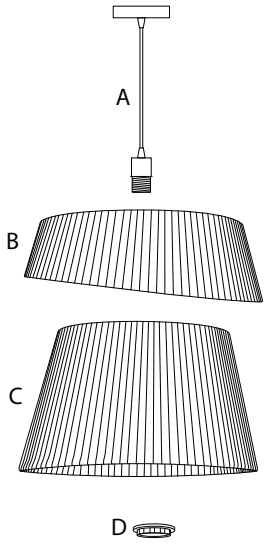

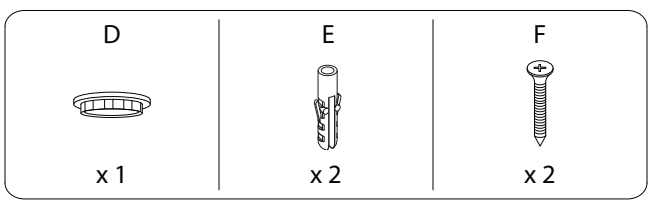

2/4

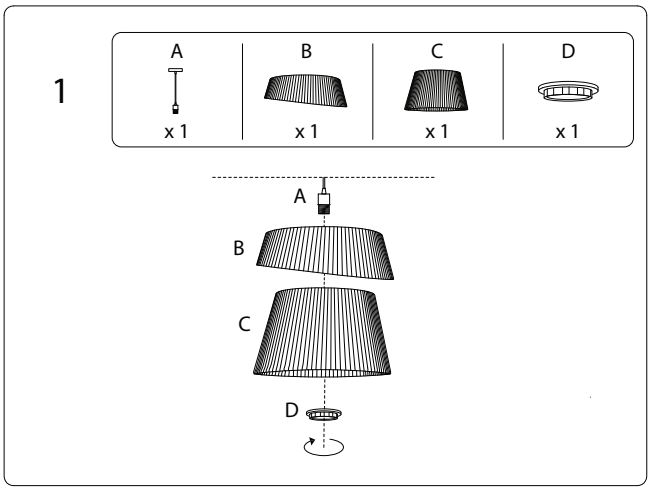

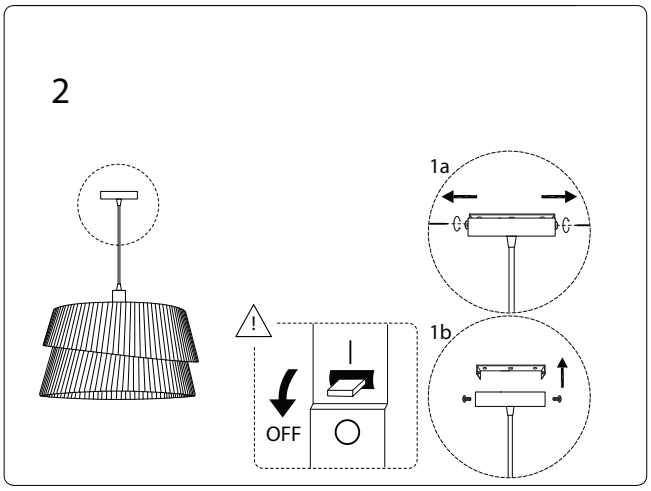

3/4

3

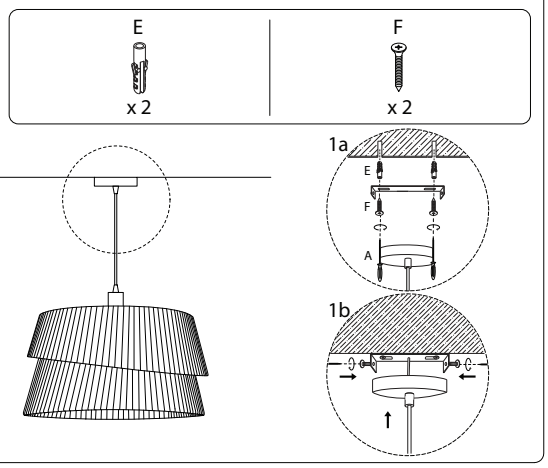

4

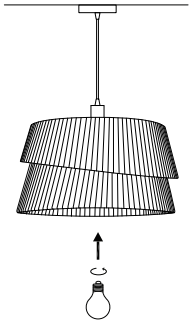

488/BIRIM/100624/