PENNA

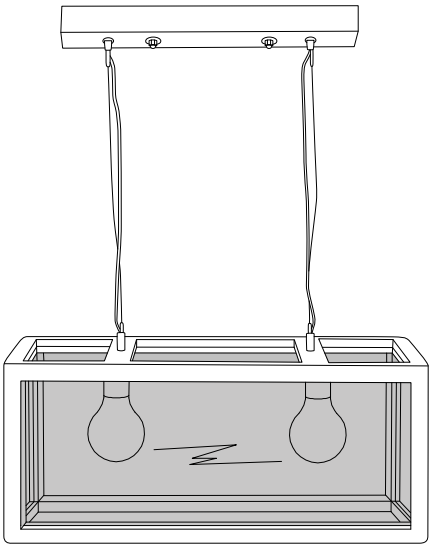

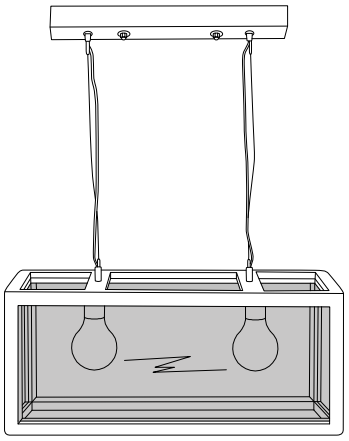

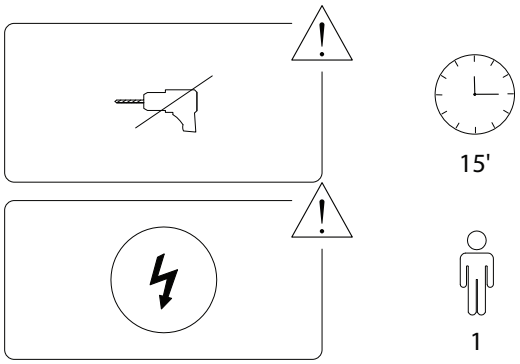

Beliani

Beliani
2030/PENNA/010923/

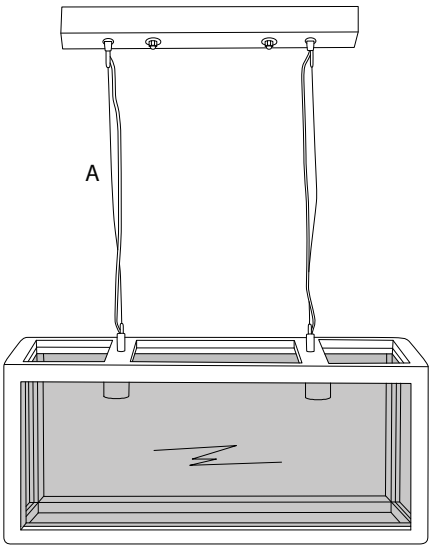

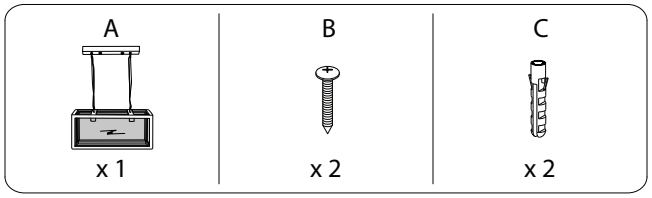

Beliani
2030/PENNA/010923/

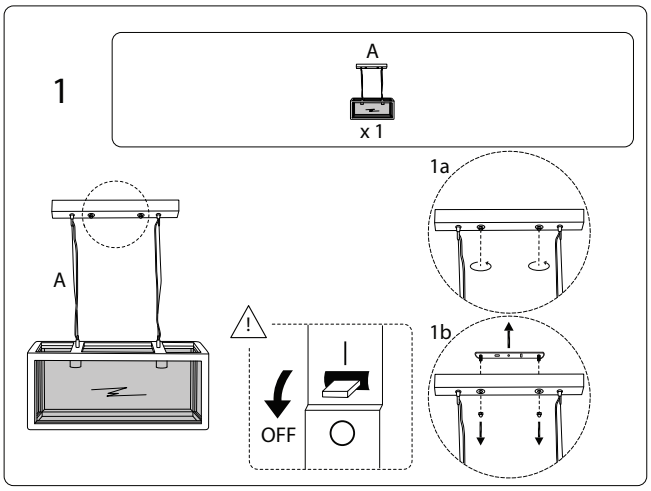

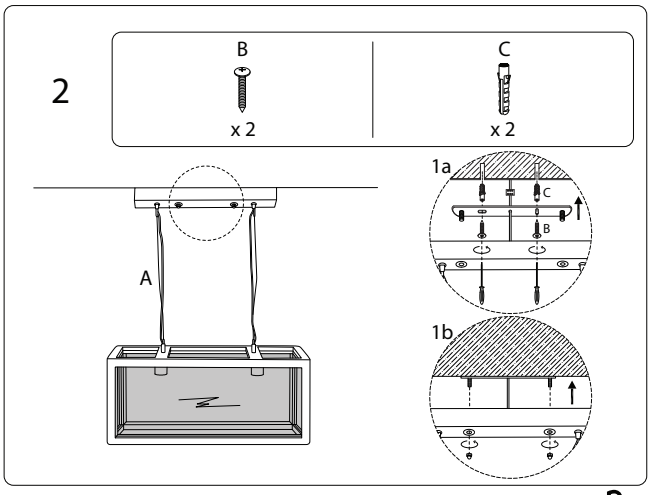

Beliani
2030/PENNA/010923/

3

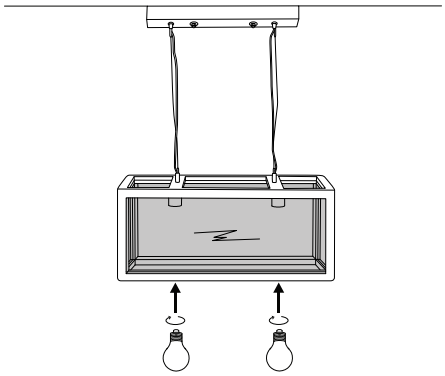

Beliani