# EREBATO

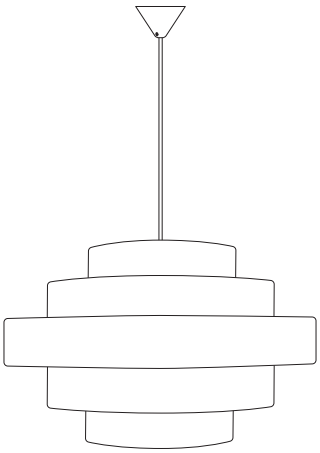

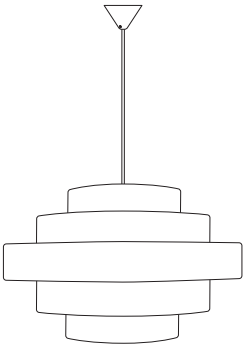

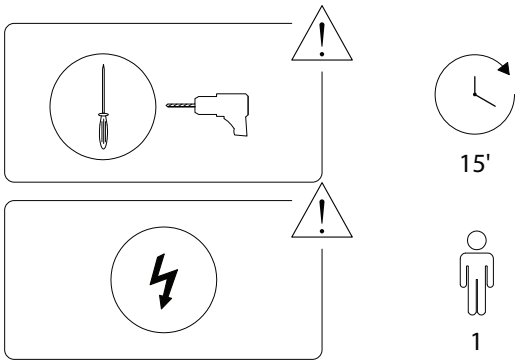


1/5



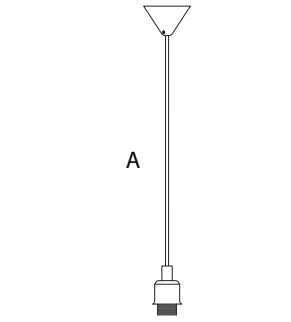


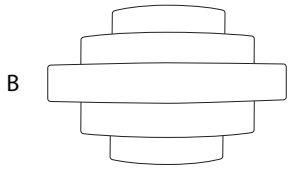


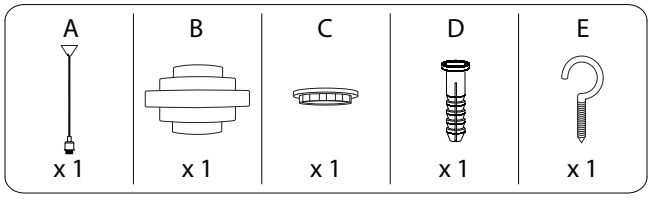


2/5



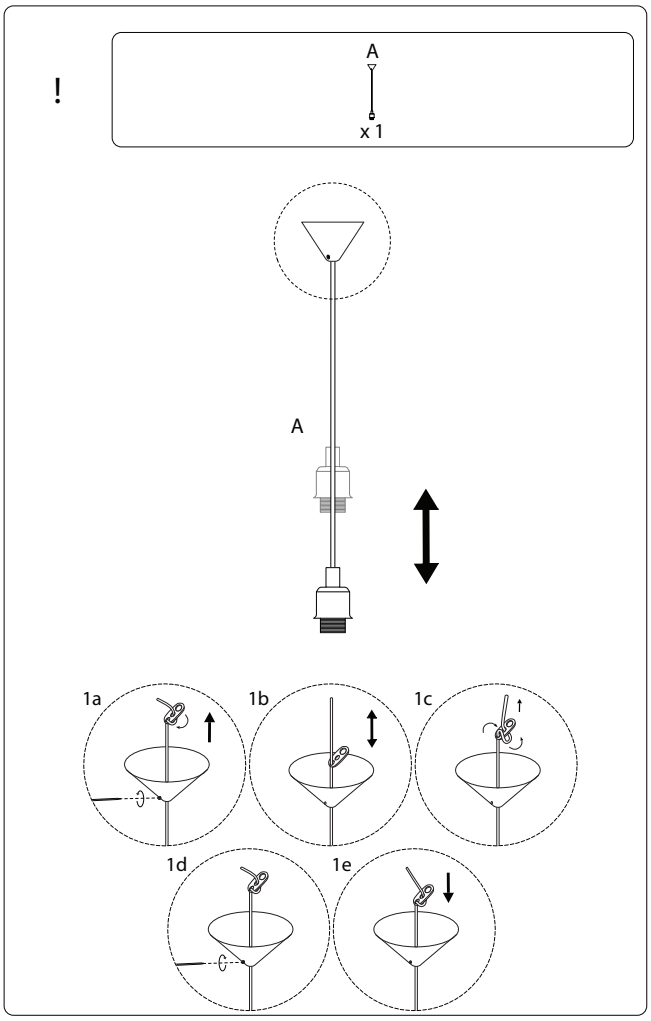


3/5

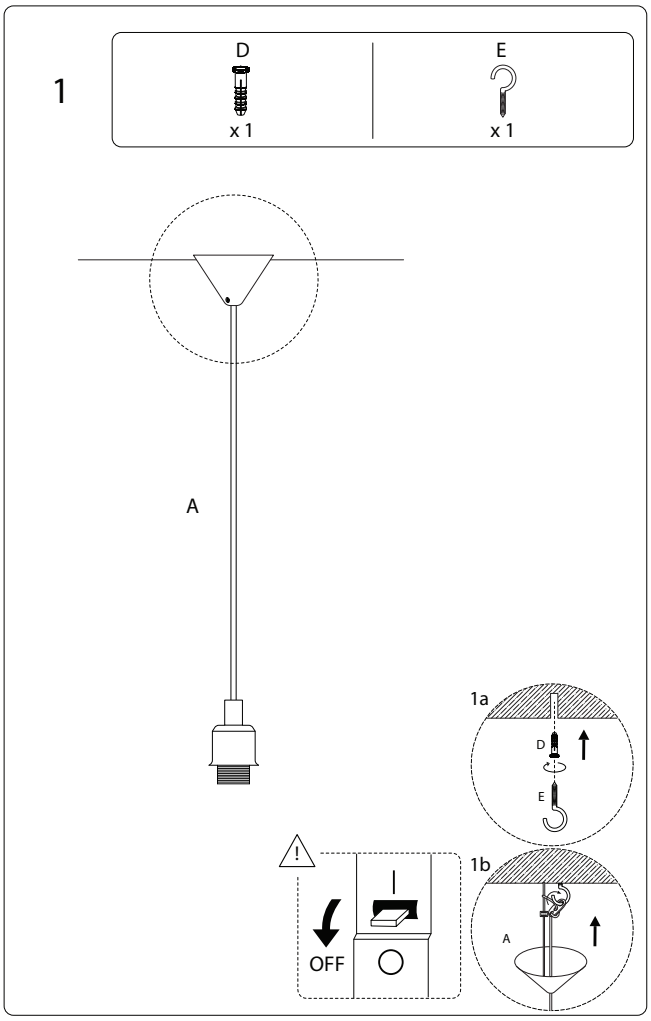




2436/EREBATO/201224/

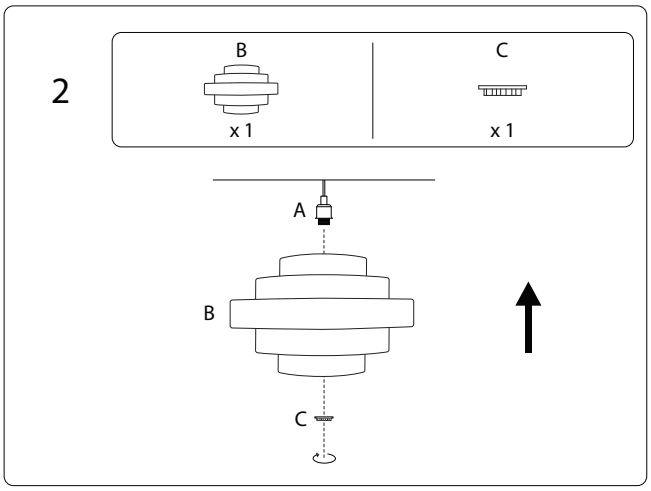


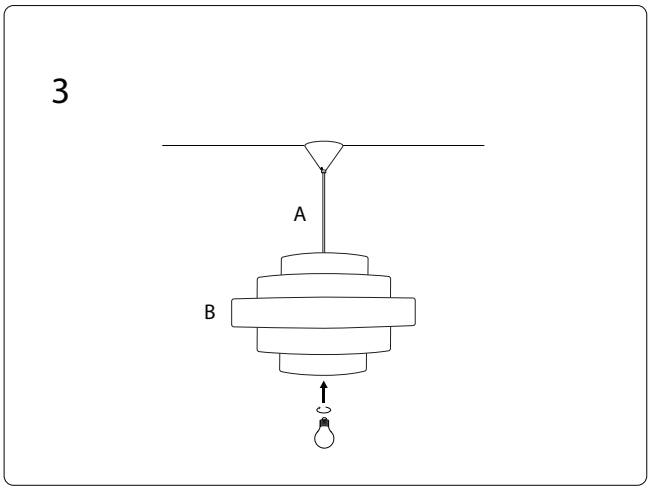




2436/EREBATO/201224/