BIRRIE

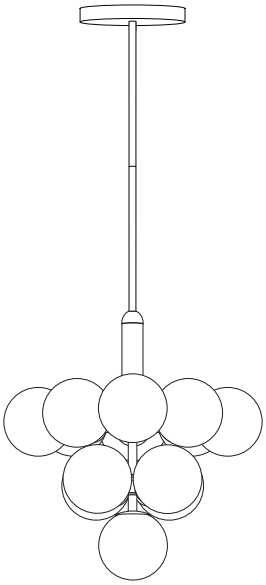

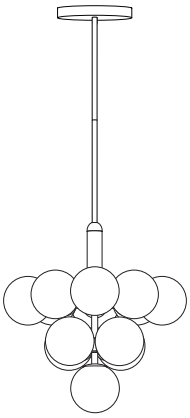

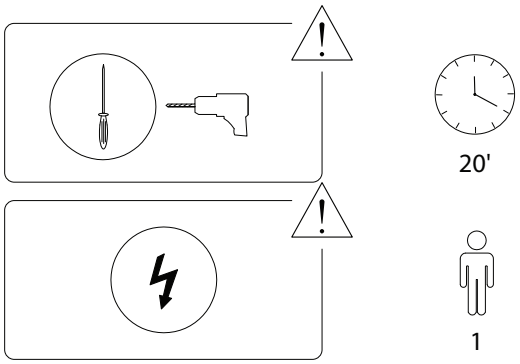

Beliani

Beliani
552/BIRRIE/270923/

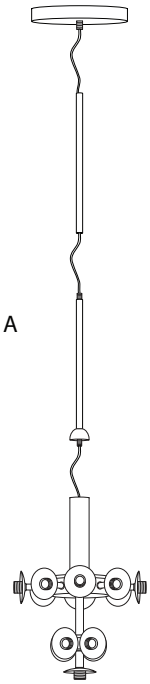



A	B	C	D
			
x 1	x 13	x 2	x 2

Beliani
552/BIRRIE/270923/

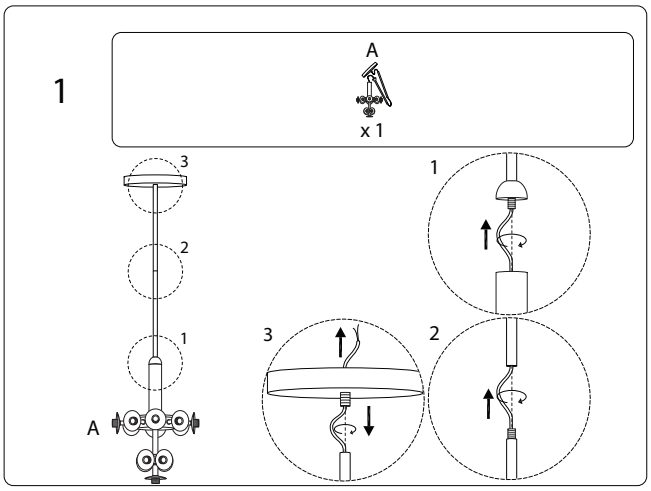

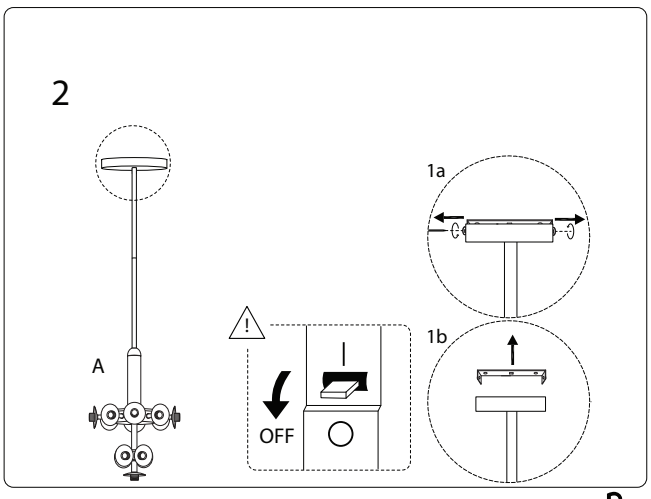

Beliani
552/BIRRIE/270923/

3

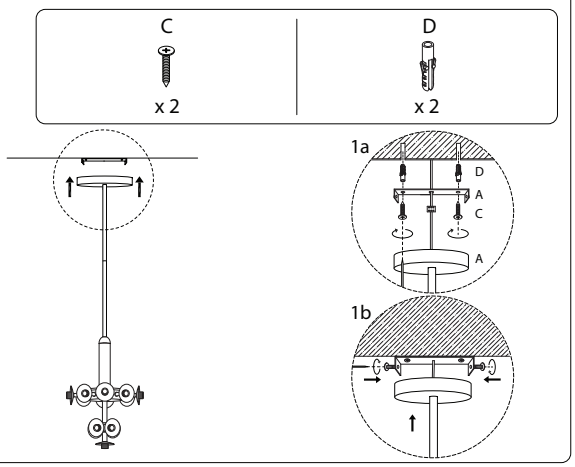

4

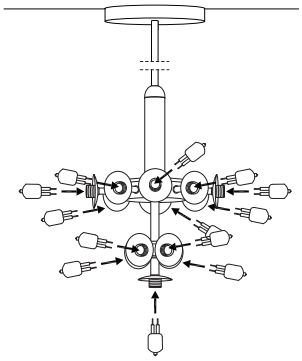

Beliani
552/BIRRIE/270923/

5

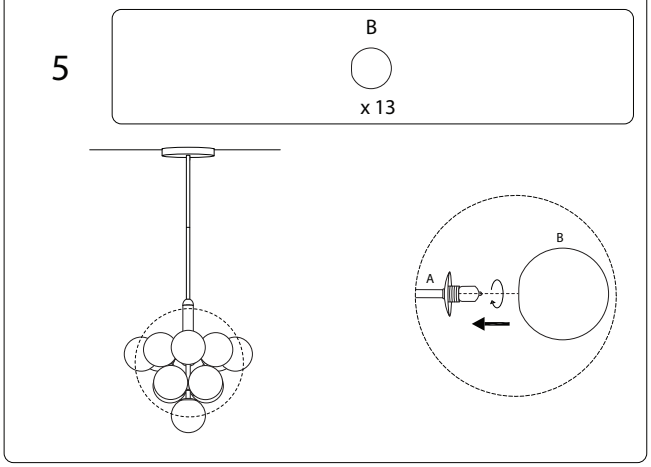

Beliani
552/BIRRIE/270923/