AKOBO





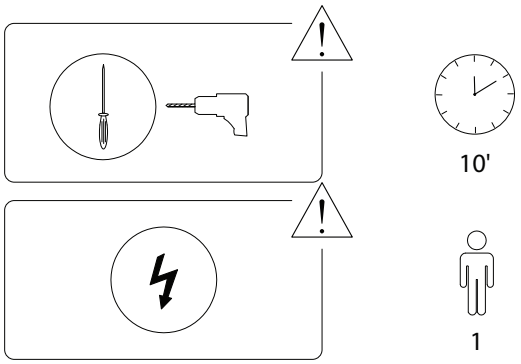

1/5

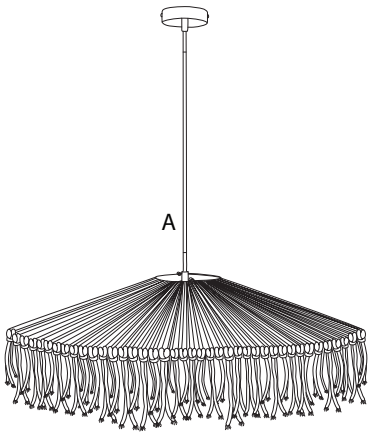

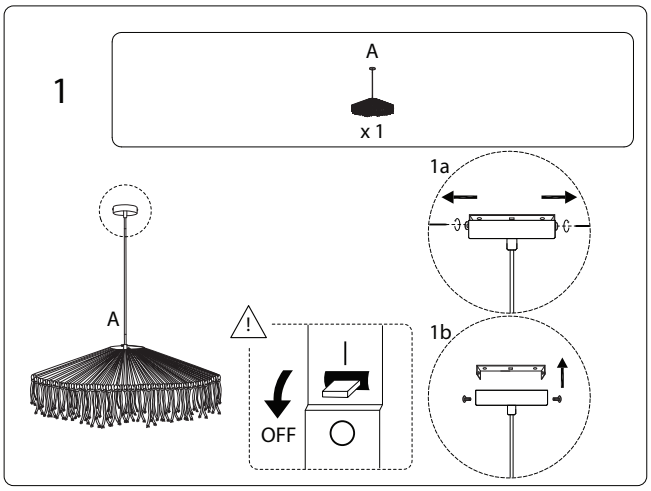

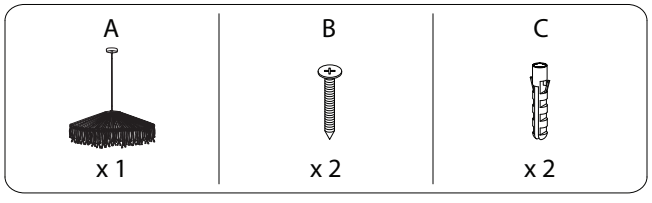

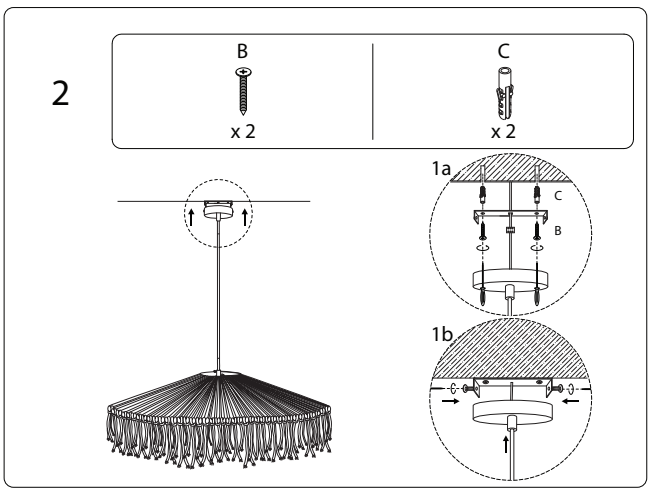

2/5

3/5

3



4/5

2099/AKOBO/220224/

!

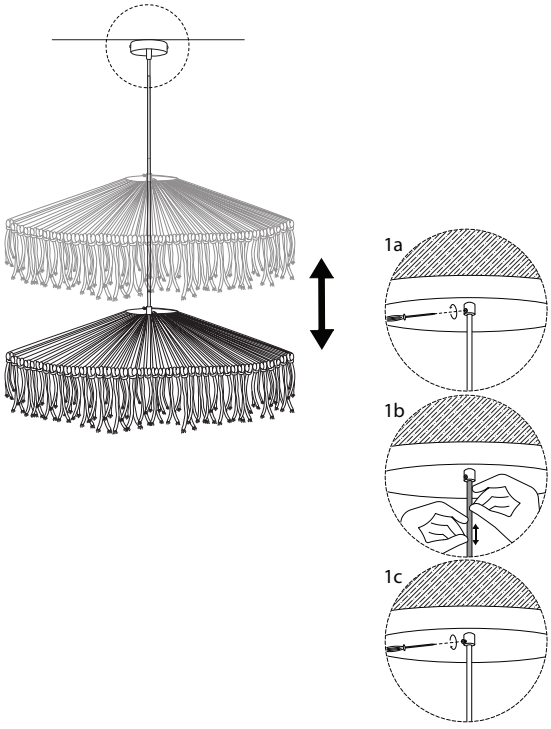

5/5

2099/AKOBO/220224/