

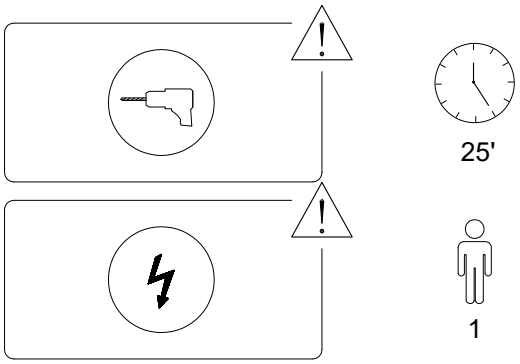

1/4

A	B	C
x 1	x 6	x 6

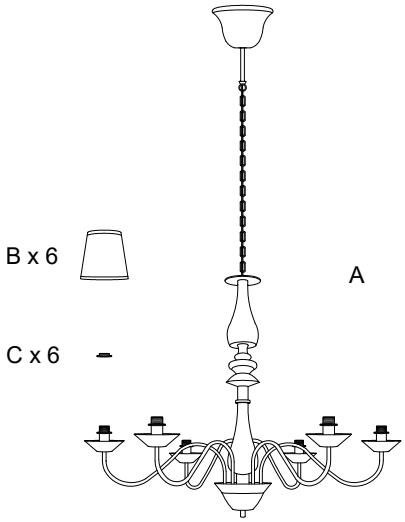

D	E
x 1	x 1

2/4

1

A	B	C
x 1	x 6	x 6

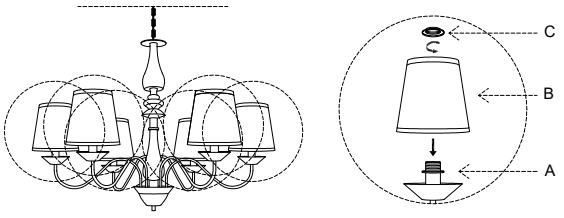

2

D	E
x 1	x 1

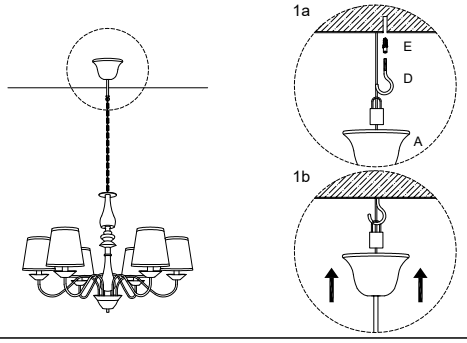

3/4

3

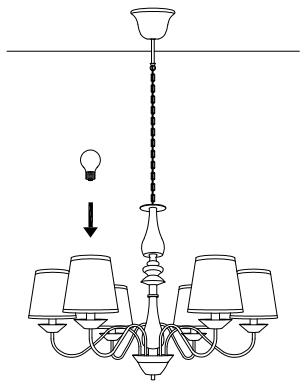

4/4