

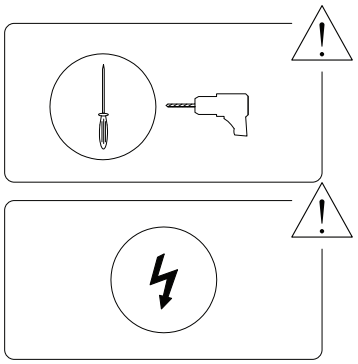





1/5

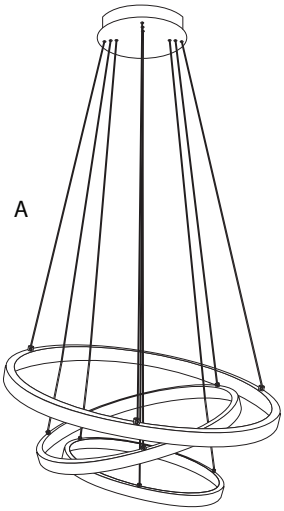

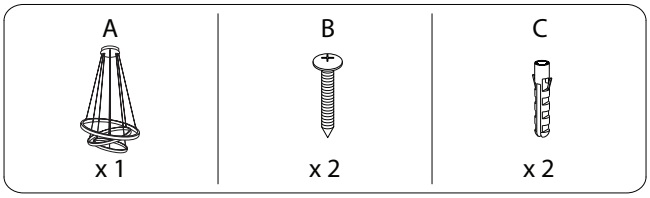

2/5

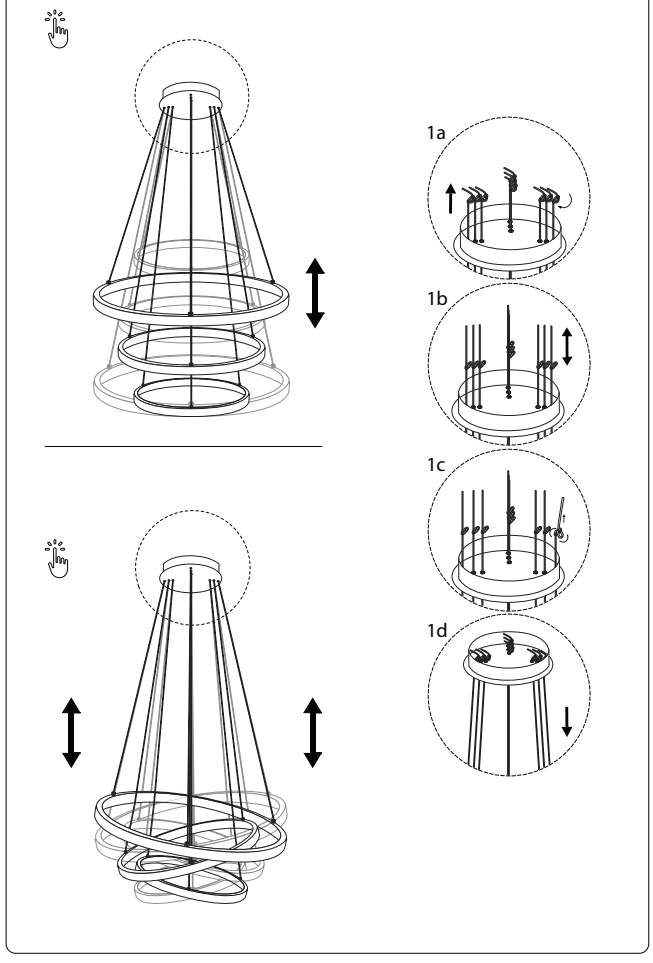

3/5

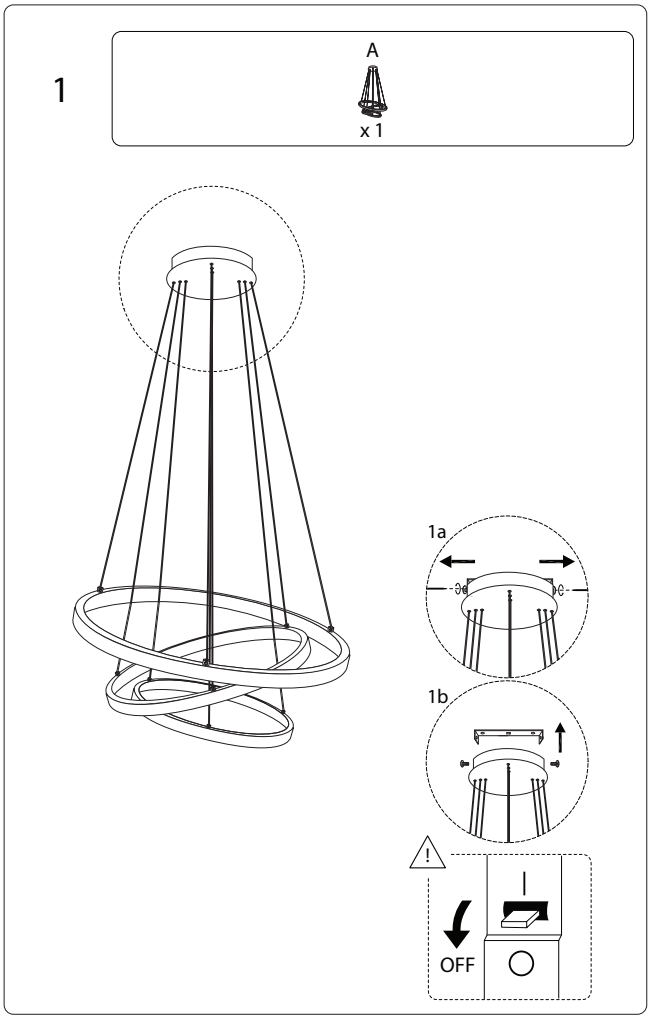

4/5

2

B	C
	
x 2	x 2

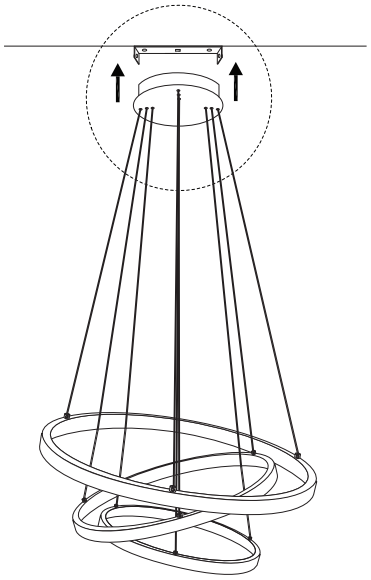

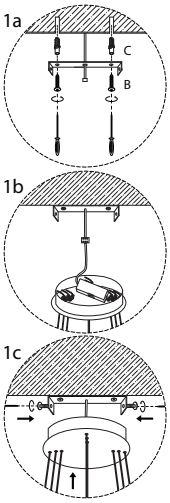

1394/ATREK/151221/