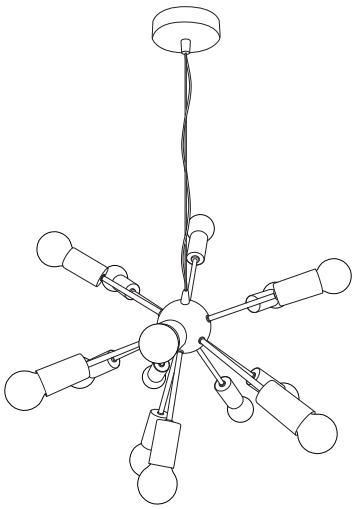

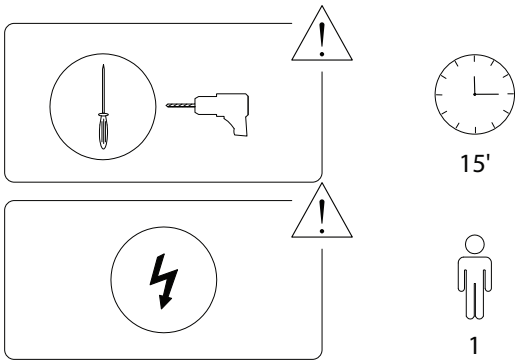

1329/BALAGAS/220222/

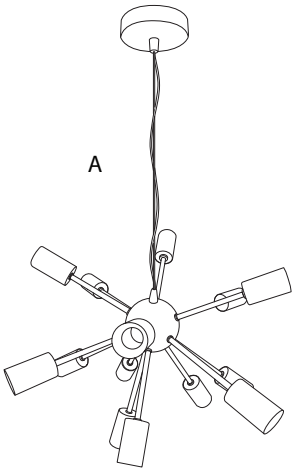

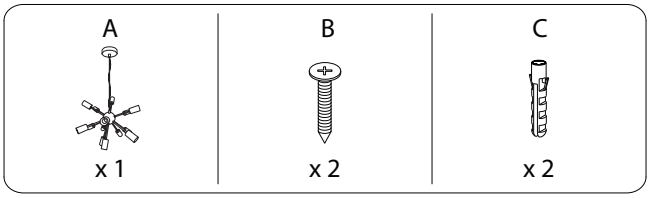

1329/BALAGAS/220222/

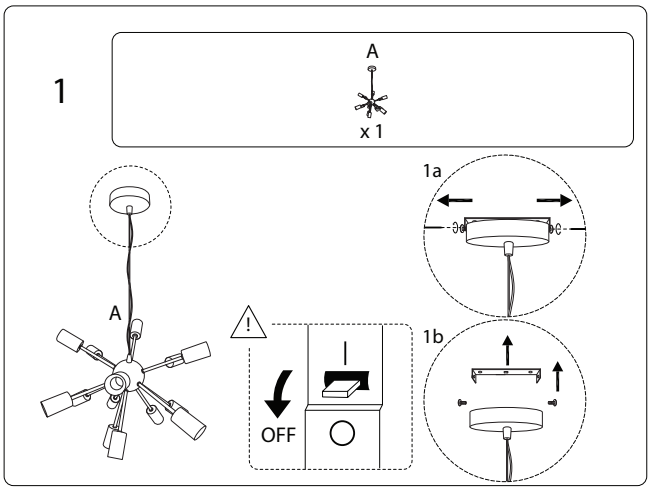

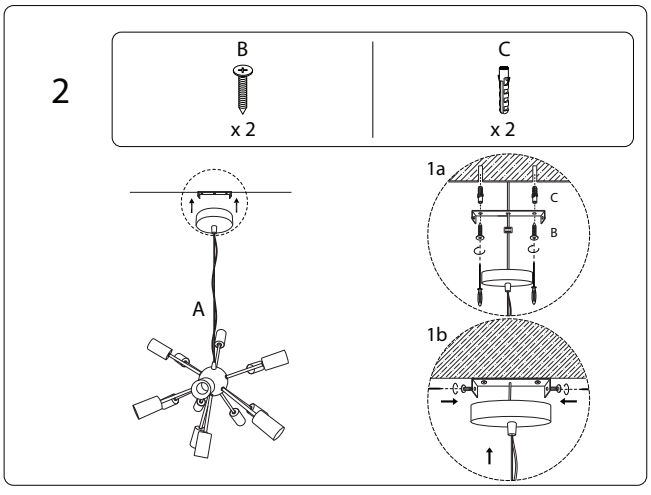

1329/BALAGAS/220222/

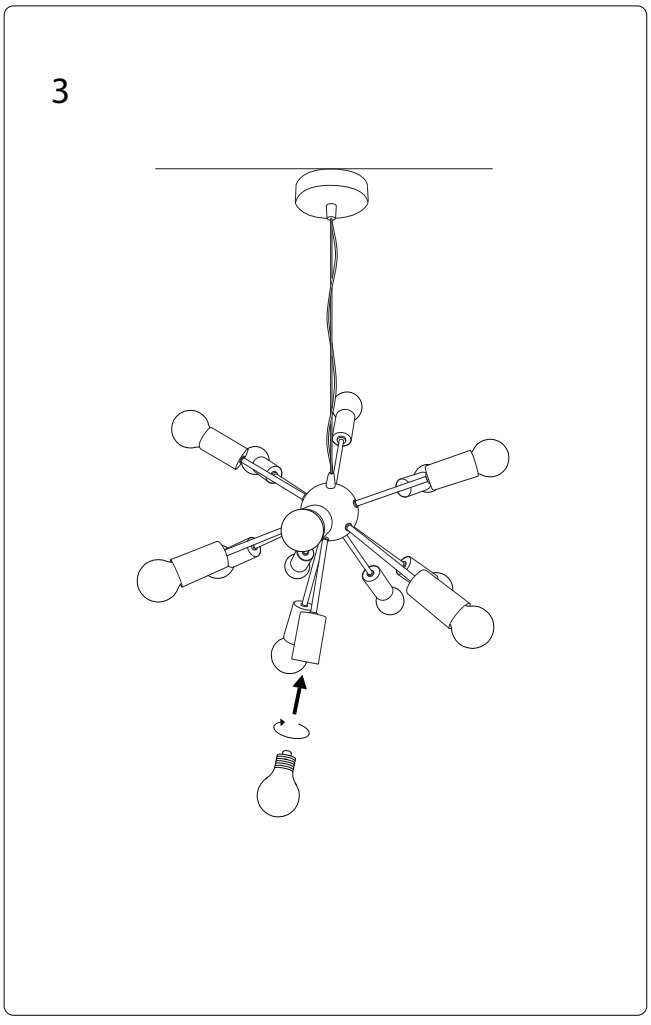

1329/BALAGAS/220222/