MARIARA

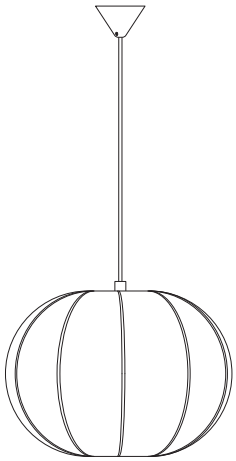



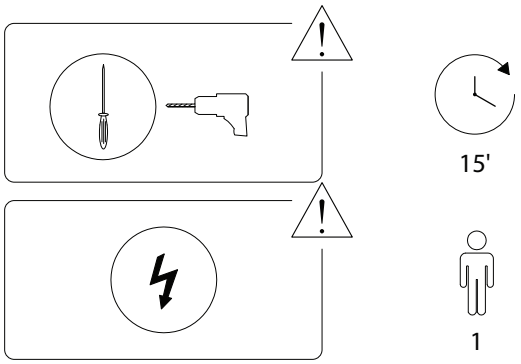

1/5

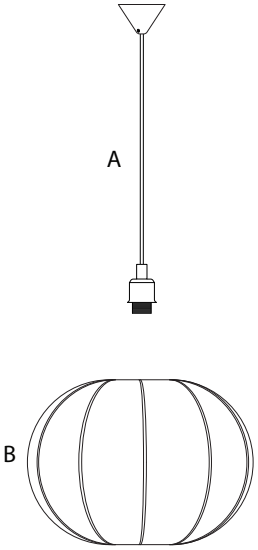

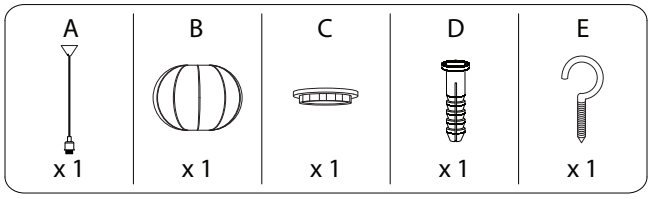

2/5

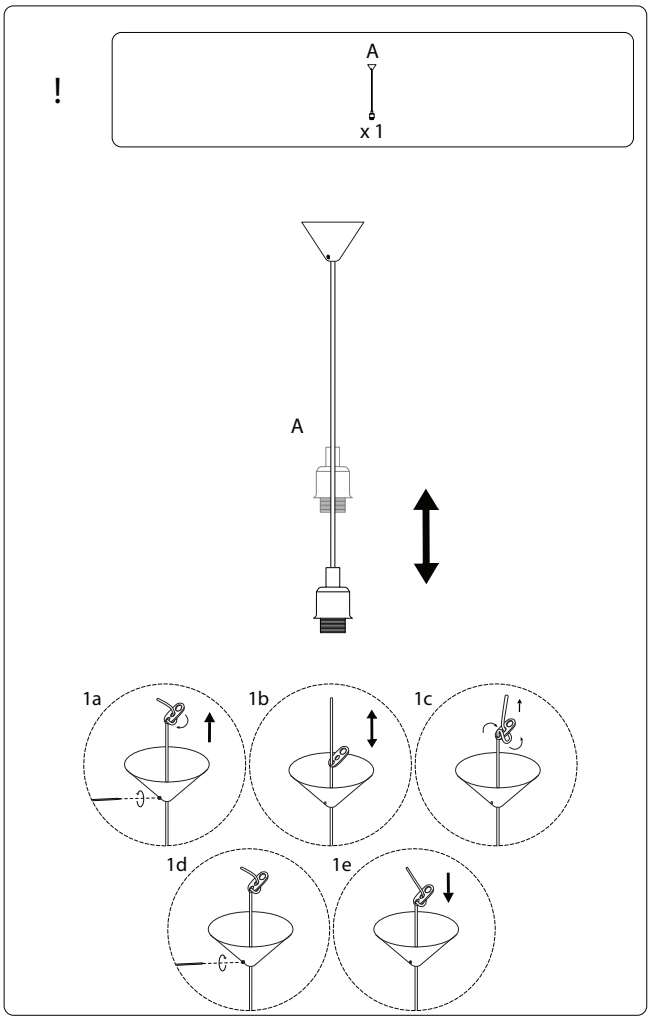

3/5

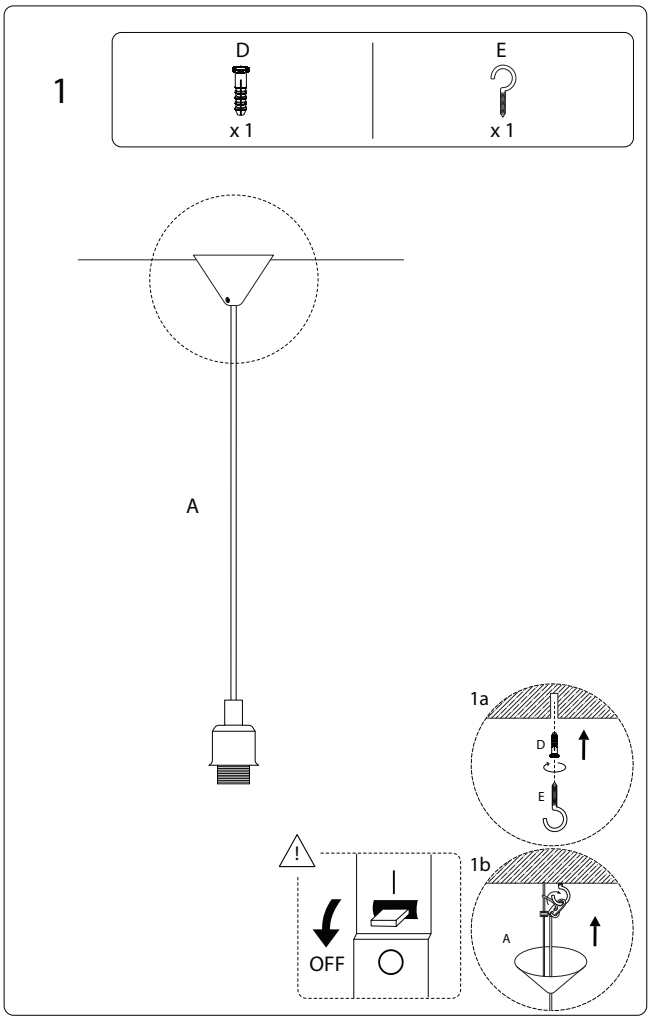
1
D
x 1
E
x 1
A
1a
D
E
1b
A
OFF

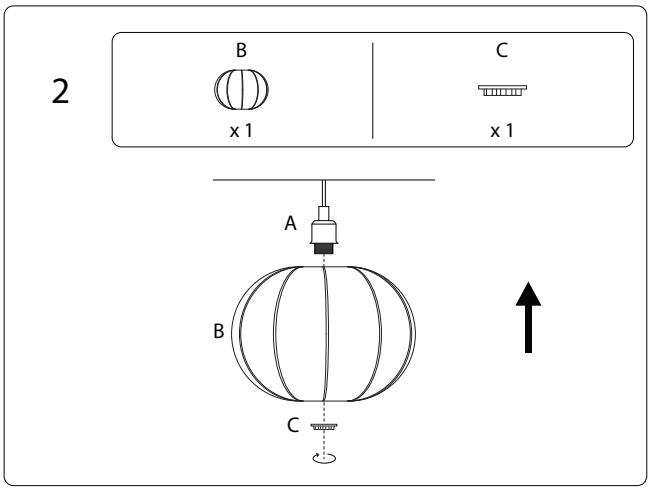
2
B
x 1
C
x 1
A
B
C

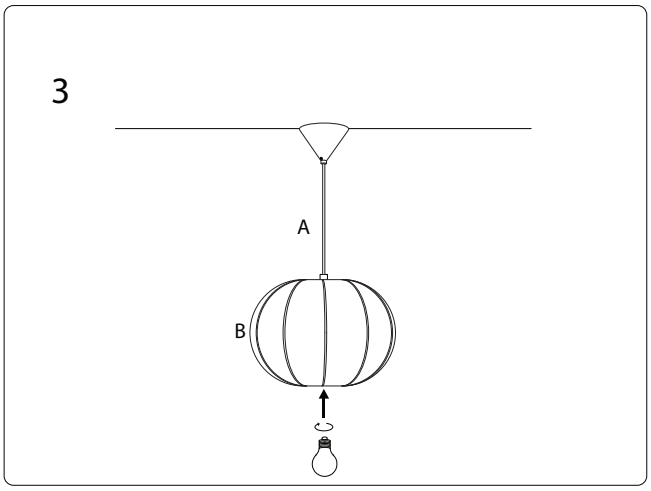
3
A
B