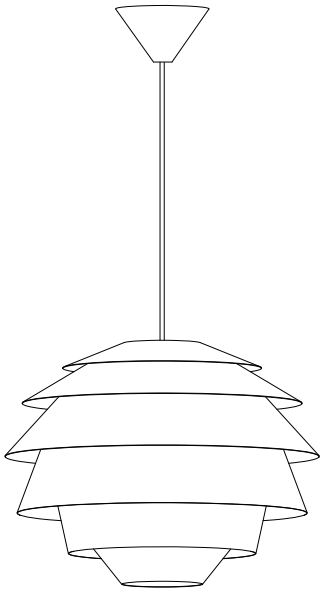

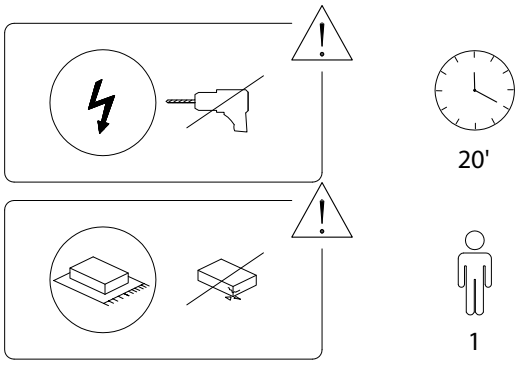
20'
1

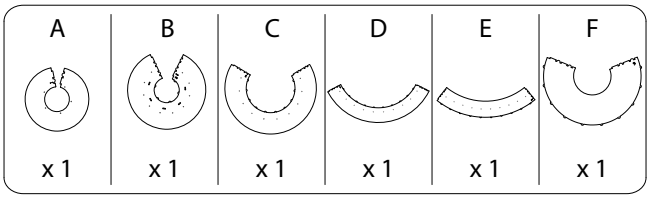
A
B
C
D
E
F
x 1
x 1
x 1
x 1
x 1
x 1

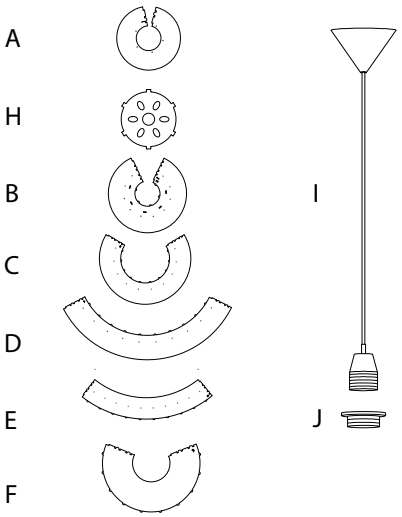
A
H
B
C
D
E
F
I
J

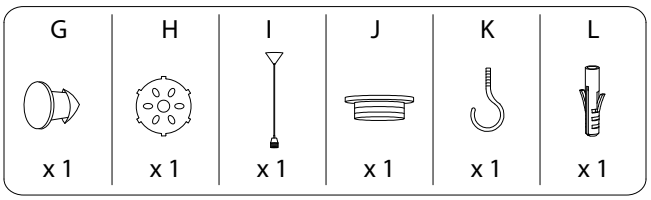
G
H
I
J
K
L
x 1
x 1
x 1
x 1
x 1
x 1

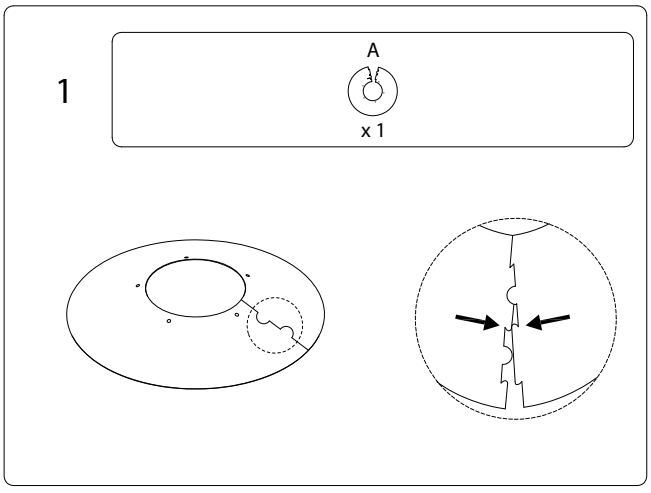
1
A
x 1

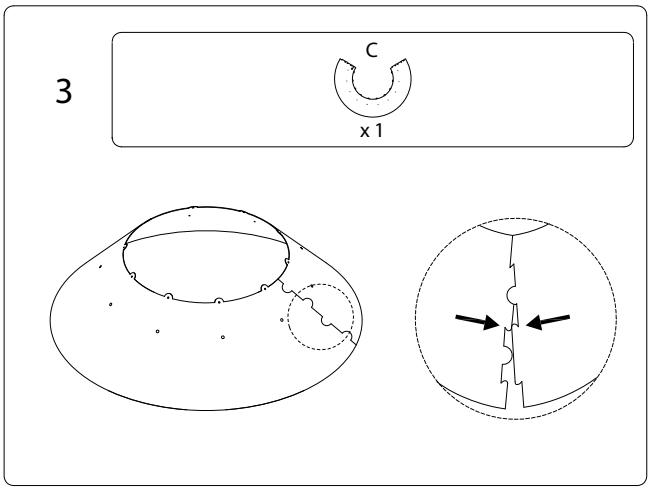
3
C
x 1

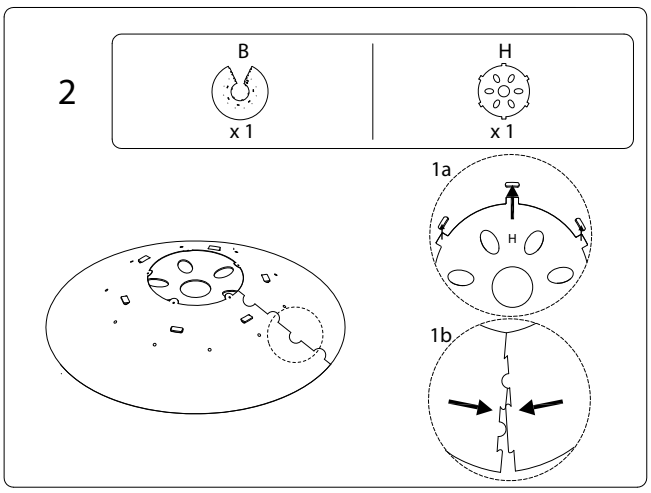
2
B
x 1
H
x 1
1a
H
1b

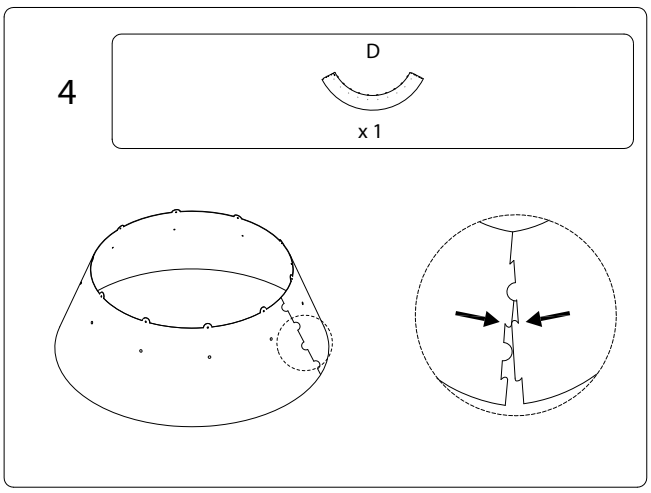
4
D
x 1

5

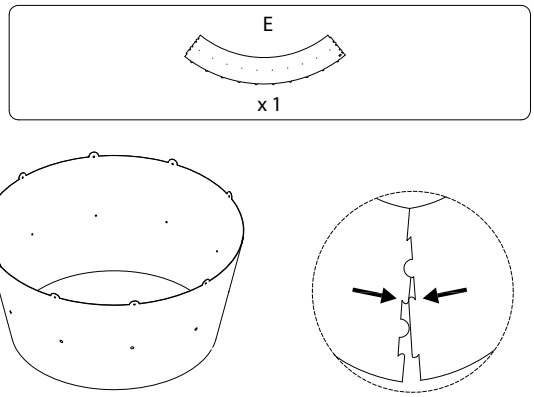

6

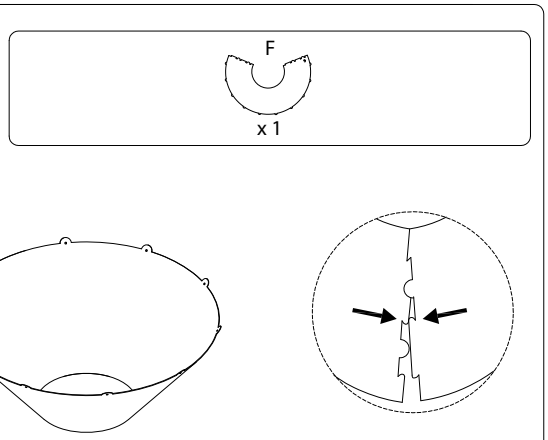

7

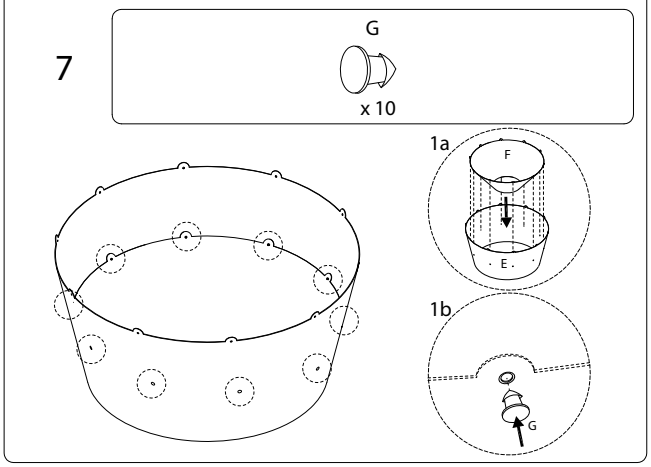

8

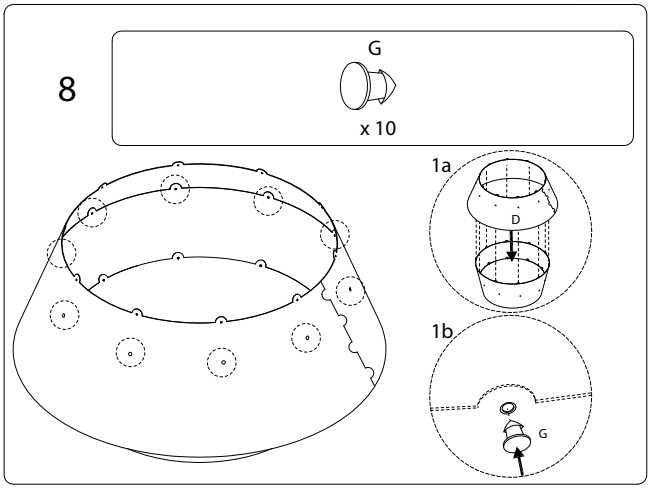

9

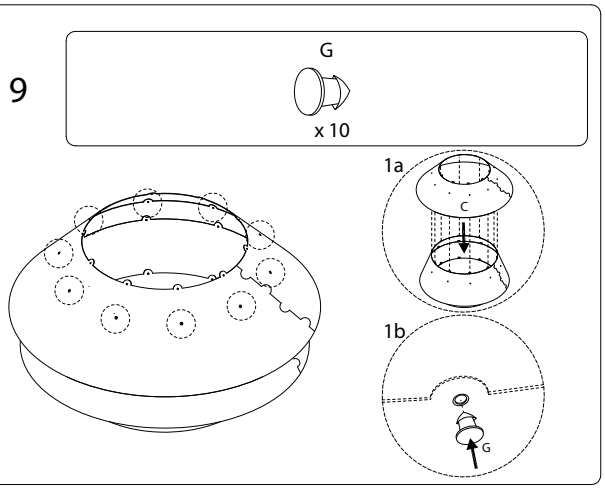

10

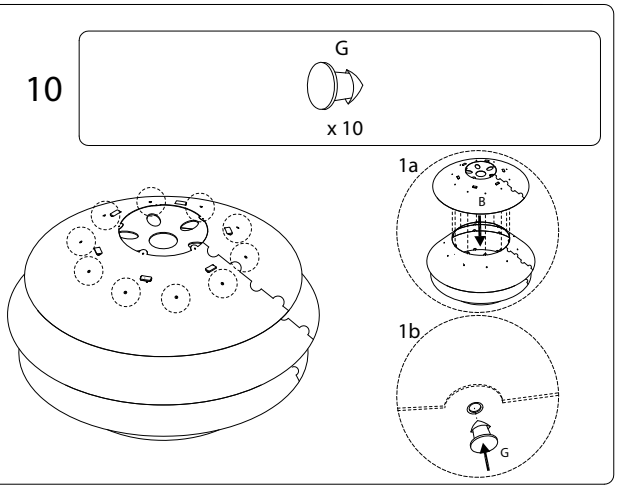

11

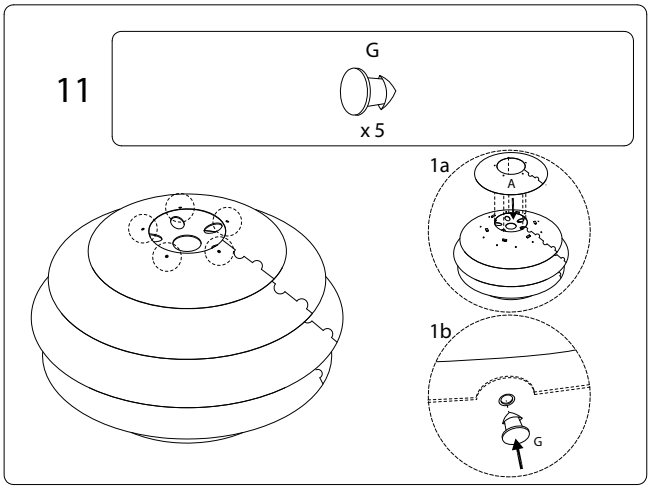

12

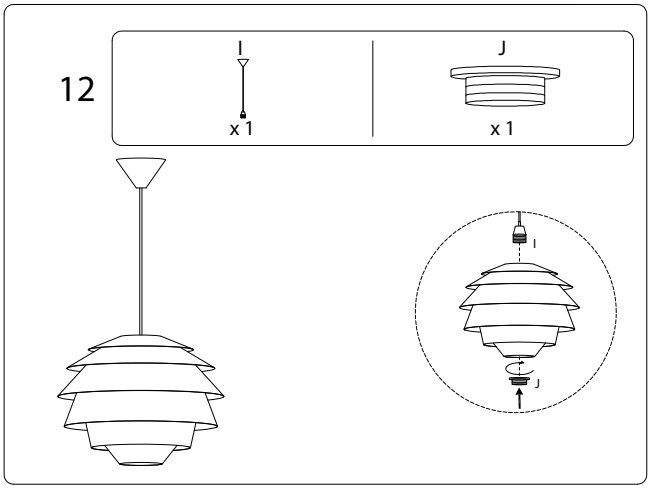

13

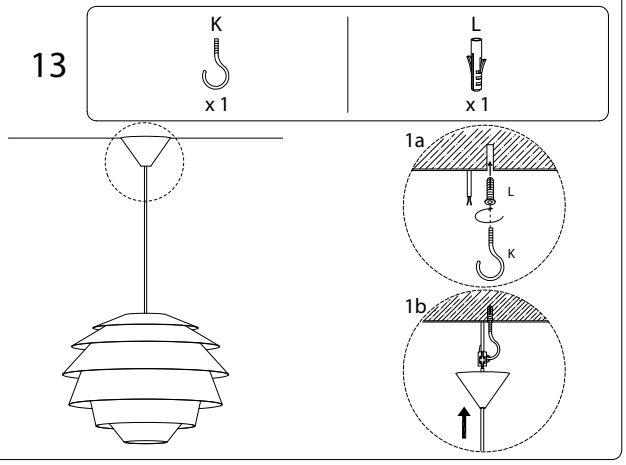

14

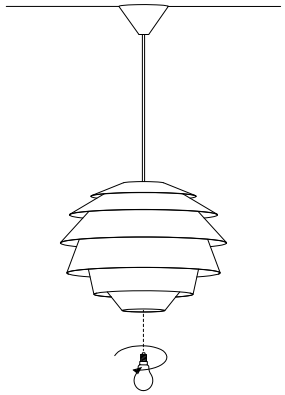

467/CONGO/300120/