# BANDON

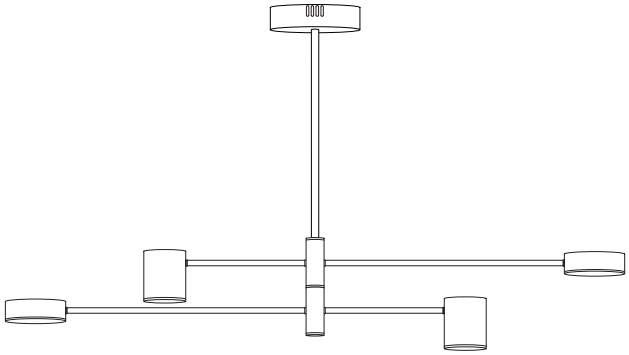

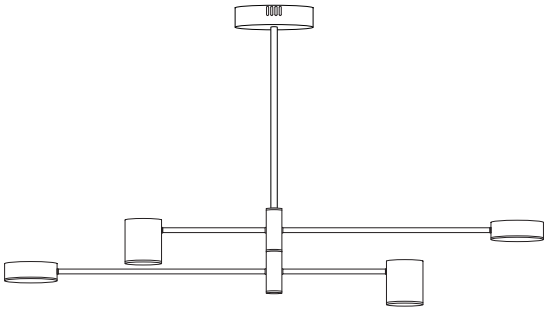

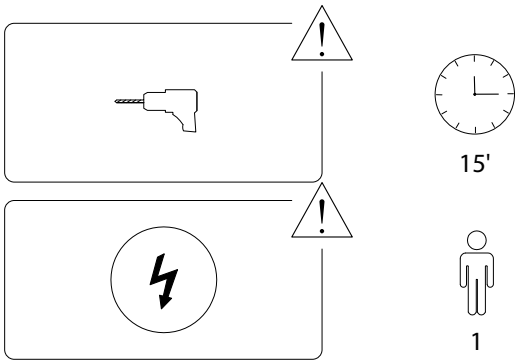


1/4



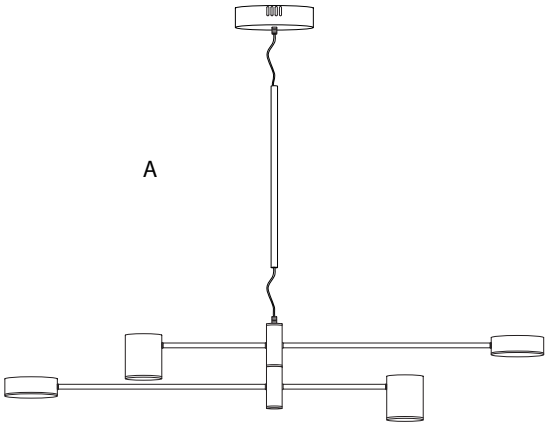


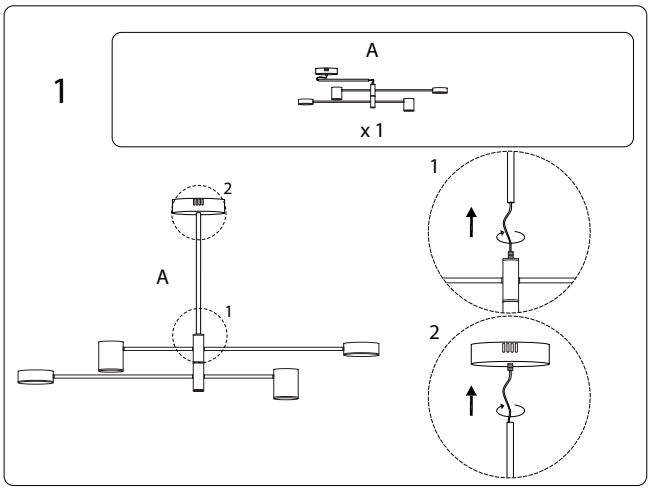


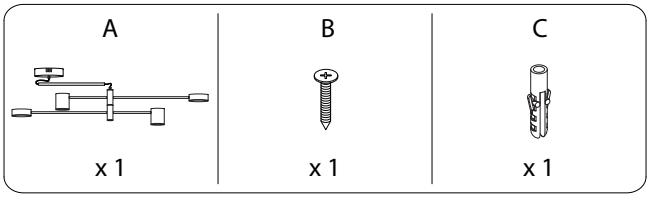


2/4



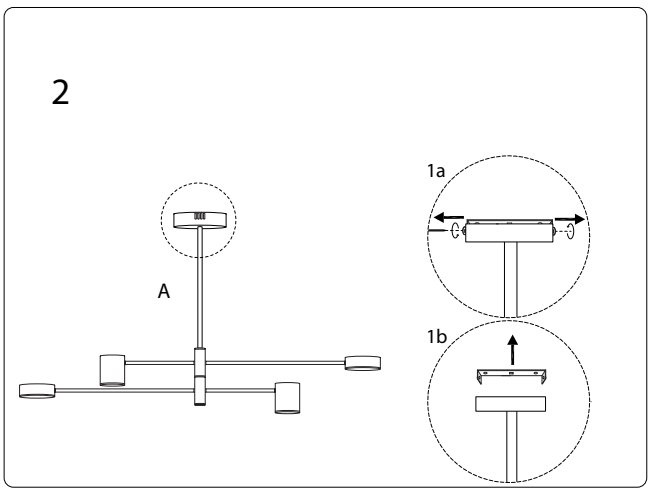


3/4

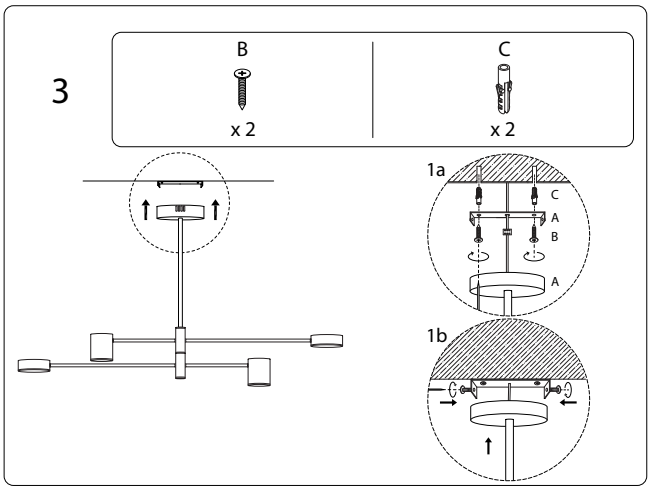




1394/BANDON/280223/