GUASARE

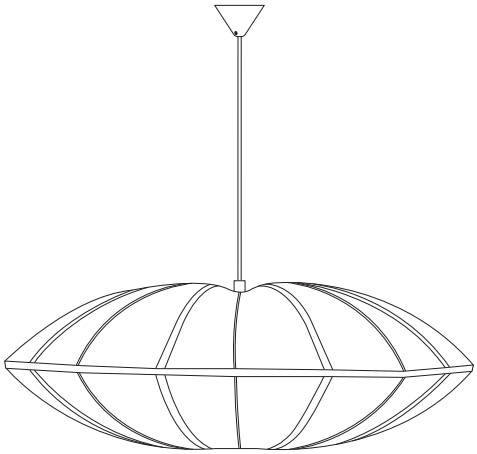

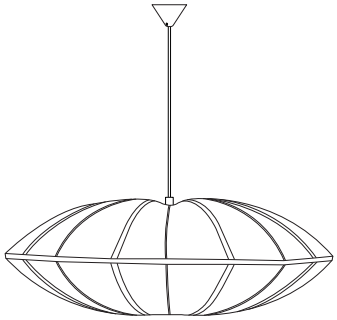

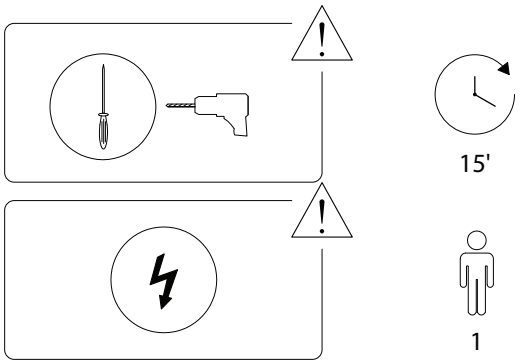

1/5

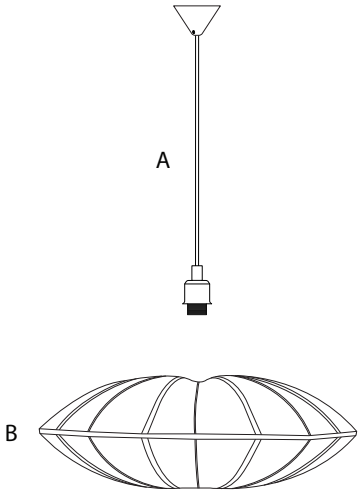

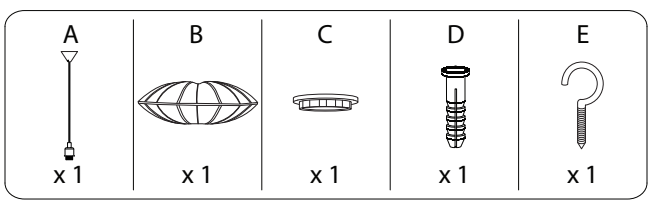

2/5

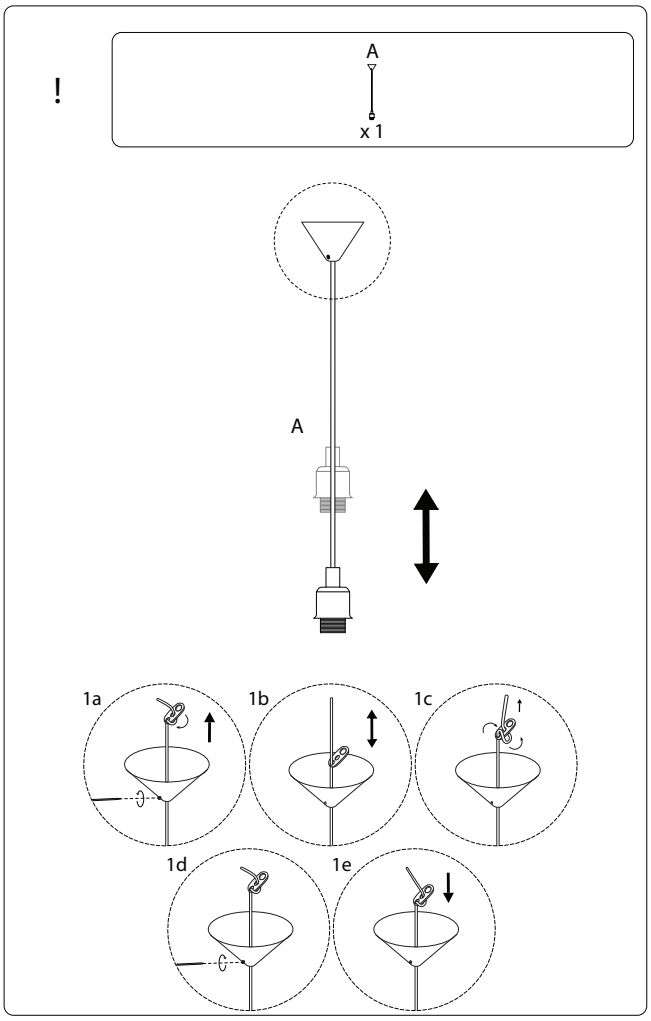

3/5

1

D x 1

E x 1

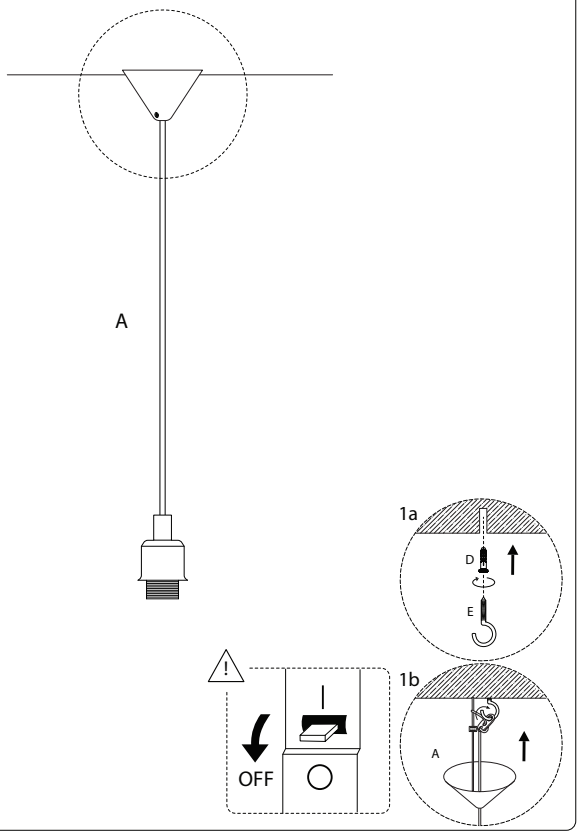

2436/GUASARE/241224/

2

B x 1

C x 1

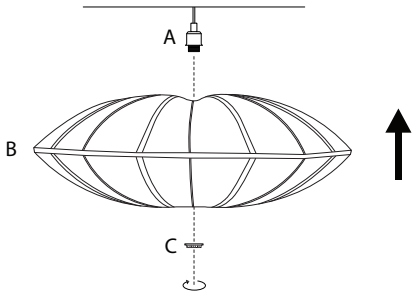

3

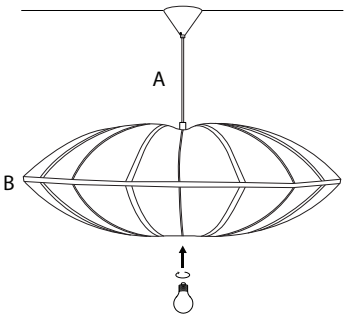

2436/GUASARE/241224/